LA SPAZIALE

INSTRUCTION MANUAL FOR THE INSTALLER

- S3
- S5
- COMPACT
- SUPER 3000
- NEW
- RAPID
- SPAZIO
- SPECIAL

LSI **001 -EN-** REV. **06**

CONFORMITY DECLARATION CE

MANUFACTURER: **La Spaziale SpA**

ADDRESS: **Via E. Duse, 8 - Casalecchio di Reno (BO) ITALIA**

HEREBY DECLARES THAT:

The espresso coffee machines from the following ranges: **S3, S5, COMPACT, SUPER 3000, NEW, RAPID, SPAZIO, SPECIAL,** conform to the directions in the following DIRECTIVES:

2004/108/CE (Electromagnetic Compatibility Directive) with application of the following (parts/ clauses) of harmonized standards:

- **EMISSION: EN 55014-1 + EN 61000-3-2 + EN 61000-3-3**
- **IMMUNITY: EN 55014-2**

2006/95/CE (Low Voltage Directive) with application of the following (parts/clauses) from harmonized standards:

- **EN 60335-1**
- **EN 60335-2-75**
- **IEC 60335-2-75**
- **IEC 60335-2-15**

EC Declaration of Conformity to the Directive 97/23/EC Pressurised Equipment Directive – PED

MANUFACTURER: **La Spaziale SpA**

ADDRESS: **Via E. Duse, 8 - Casalecchio di Reno (BO) ITALIA**

HEREBY DECLARES THAT:

On espresso coffee machines from the following ranges: **S3, S5, COMPACT, SUPER 3000, NEW, RAPID, SPAZIO, SPECIAL,**

The overall pressure is composed of a boiler complete with safety and adjustment devices, used for rapid preparation of espresso coffee, steam and infusions.
This assembly conforms to the essential requirements of the Directive 97/23/EC and to national laws acknowledging it, following the conformity assessment procedure below:

- **UNI 9887 Regulations, ISPESL collection rev. 95**

The assembly also satisfies the following EC Directives:

- **2006/42/CE - 2006/95/CE - 2004/108/CE**

Franca Cacciari (CEO)

CONTENTS

1 GENERAL NOTES

1.1 RATING PLATES

LA SPAZIALE Espresso coffee machines	La Spaziale S.p.A. via E. Duse, 8 40033 Casalecchio di Reno BOLOGNA - MADE IN ITALY - (UCIMAC)	
	N.F.	2007
CE	MOD. VOLT Hz WATT IPX2	
P.S. 0,6 MPa max	BOILER litres 0,15 MPa	

LA SPAZIALE	- MADE IN ITALY - (UCIMAC) - CASALECCHIO DI RENO (BO) -
GAS PRESSURE	G 110 = 8 mbar
CATEGORY III	G 20 = 18 mbar
TYPE A	G 30 = 30 mbar
BURNER POWER kW	

The rating plate of the appliance is located in the area below the drip tray (9). To have access to the rating plate, switch the appliance off at the main switch (3) and then remove the drip tray (9).

1.2 GENERAL WARNINGS

WARNING!
The electric system, water supply system, drainage system and any gas system (in case the appliance is pre-fitted for gas), must already be put in place by the customer in order to allow the proper installation of the machine. The installation engineer cannot change the existing system put in place by the customer. See the chapter "Arrangements for installation provided by the customer" in the "USE AND MAINTENANCE MANUAL" provided with every appliance.

WARNING!
The appliance must be installed where use and maintenance are restricted to trained staff.

Disposal of the equipment by the users within the European Community (WEEE) in compliance with the article 13 of the legislative decree issued on 25 July 2005, nr151 "Implementation of the directives 2002/95/CE,2002/96/CE and 2003/108/CE, concerning the decrease in the usage of dangerous substances in the electrical and electronic equipment and the disposal of waste"

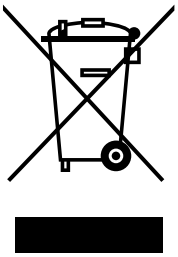

The symbol of the crossed waste bin indicated on the equipment or on the packaging means that the product at the end of its lifetime must be disposed of separately from all the other waste.
The separate collection of this equipment coming at the end of its lifetime is organized and run by the importer/distributor. The user who should have to dispose of such equipment should get in touch with the importer/ distributor and follow the procedure they have adopted for the separate disposal of the equipment coming at the end of its lifetime.
The proper separate disposal of disused equipment so that it can be recycled and treated according what is environmentally compatible contributes to avoid possible negative effects on the Environment and on Health and allows the reutilization and/or the recycling of the materials the equipment is composed of.
The improper disposal by the user causes the enforcement of the administrative sanctions according to current regulations.

NOTE. The connections to water mains, electricity and gas (where foreseen) are all carried out in the same way for all appliance models described in this manual. For the settings, adjustments, programming and alarms control sections, please see the relevant chapter for each appliance model in this manual.

WARNING!
This appliance may only be used for its intended purpose. Any other use is therefore considered as improper and unreasonable.
The manufacturer cannot be held liable for any damage caused by improper, incorrect or unreasonable use.

1.3 MACHINE EQUIPMENT

- **A** 1 set of filter holders with relevant spouts
- **B** 1 complete set of hoses for connection to motor-driven pump (not supplied)
- **C** 2 sets of filters
- **D** 1 set of shower heads
- **E** 1 wrench for shower head removal
- **F** 1 brush
- **G** 1 motor-driven pump (unless already built in)
- **H** 1 manual coffee tamper

1.4 WARNINGS FOR THE INSTALLER

Read carefully the instructions and warnings contained in this manual and in the “USE AND MAINTENANCE MANUAL”, since they provide important indications concerning the installation of the appliance.

- Make sure that the customer has previously installed the systems according to the instructions indicated in the “USE AND MAINTENANCE MANUAL” provided with the appliance.
- Make sure that the power rating of the system arranged by the customer corresponds to the highest rating indicated on the rating plate of the equipment.
- The appliance is supplied without a plug. It is supposed to be directly connected to the electric mains and therefore, it is necessary to fit a single-pole switch with contact opening of 3 mm or more beforehand, according to the regulations in force.
- In case of replacement of the power cable of the equipment, use the following type of cable: CET ELECTRIC H07RN-5X2.5mm. Replacement must be made by a qualified technician.
- The electrical safety of the appliance is fully achieved only after it has been correctly connected to an earthing system as required by the laws in force.
- The appliance must be supplied exclusively with cold drinking water. Maximum mains pressure (static pressure) must not be higher than **0.6 MPa**.

If in doubt, concerning the above mentioned requirements (about the system previously installed by the customer), please have them checked by qualified staff.

WARNING!
Installation must be carried out by qualified personnel according to current laws and to the manufacturer’s instructions. Incorrect installation may cause damage to people, animals or property for which the manufacturer cannot be held liable.

- The appliance must be installed on a flat bearing surface, whose stability needs to be checked.

1.5 INSTALLATION

After unpacking the machine, please check its integrity; in case of doubt, do not use it and consult the manufacturer. Packaging materials must not be left within children's reach since they are potentially dangerous.

Place the machine on the bearing surface by lifting it from its base. Adjust the feet so that the machine is perfectly horizontal and slightly inclined backwards.

⚠ **The appliance weight is more than 30 kg and therefore, it cannot be moved by a single person alone.**

Before connecting the machine to the system make sure that the data stated on its rating plate corresponds to the data for the place of installation.

KEY

1. Power cable of the appliance
2. Main switch (previously installed by the customer)
3. Water tap (previously installed by the customer)
4. Drain siphon (previously installed by the customer)
5. Water drain pipe (provided with the appliance)
6. Water softener (optional)
7. Motor pump (provided with the machine, if not built-in)
8. Gas tap (previously installed by the customer)
9. Gas supply pipe (for preset equipment)
10. Motor pump cable (if not built-in)
11. High-pressure hoses

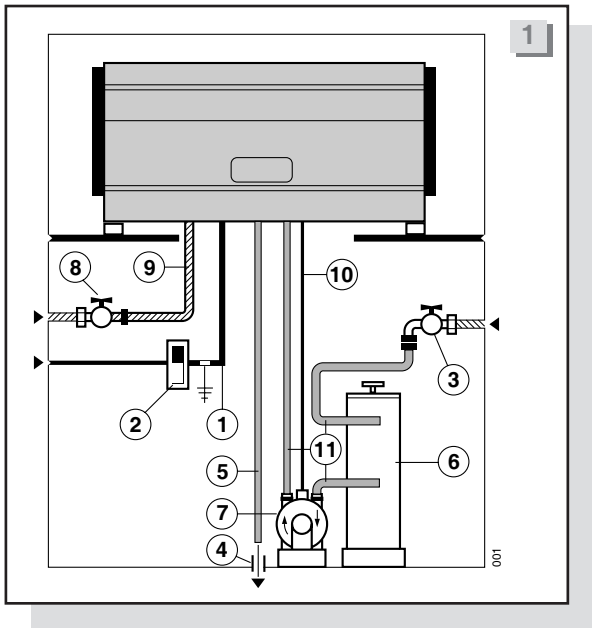

1.6 ELECTRIC INSTALLATION DIAGRAM

KEY

1 Main switch (prepared by the customer)

2 Motor pump (if not built in)

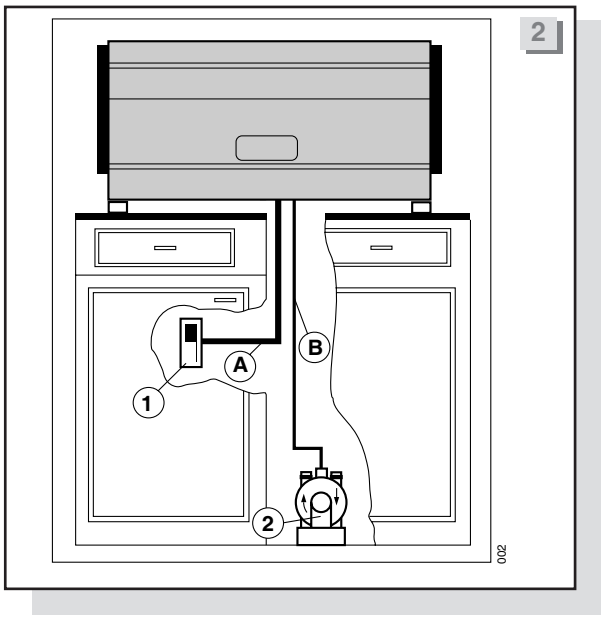

When carrying out electric connections, please take into consideration all warnings and indications provided in this manual. Furthermore, in order to avoid dangerous overheating, unwind the power cable completely. Should the power rating of the installation site not correspond to the one stated on the machine plate, change the connections on the heating element and on the power cable of the machine, following the wiring diagrams enclosed in this handbook and/or inside the machine (on the right side).

The appliance cables are marked as follows:
A - Appliance power cable
B - Motor-driven pump cable (if not built in)

a) Connect cable A – (Pict 2) directly to the single-pole switch (1 - Pict 2).
b) Connect cable B - (Pict 2) directly to the motor-driven pump (2 - Pict 2).

Cable B (pict2) is not to be found on appliances fitted with built-in pump.

For the connections in point a), please refer to the wiring diagrams in the chapter "Wiring Diagrams" for the appliance model being installed.

Connect the yellow/green wire of cable B (Pict 2) to the earth terminal pre-fitted to the motor pump (if not built in).

When making the 400 3 + N connection, connect the blue wire of cable A (Pict 2) to the neutral phase of the system.

CONNECTION DIAGRAM FOR HEATING ELEMENTS AND THE POWER CABLE IN 400V THREE-PHASE APPLIANCES

	V400/3	V230/3	V230
Heating element connection	Black, Red, Brown	Black, Red, Brown	Black, Red, Brown

	V400/3	V230/3	V230	
Power cable connection	N N M A R S T N Neutral Phase	N N M A R S T Phase	N N A M F N Phase Neutral	**N = Black** **A = Blue** **M = Brown**

NOTE: 230V single-phase connections are only possible with rating plate data of 5000 W or lower.

1.7 WATER MAINS INSTALLATION DIAGRAM

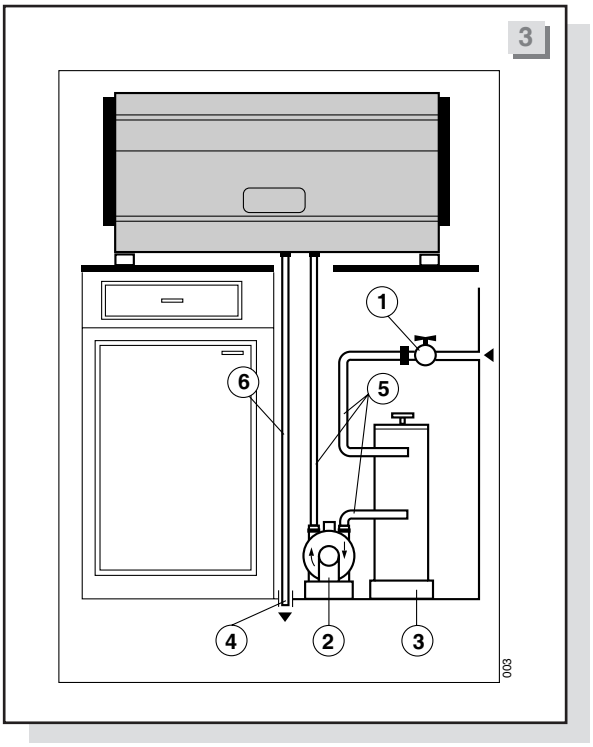

KEY

1 Water tap (previously installed by the customer)

2 Motor pump (provided with the machine – when not built in)

3 Water softener (optional)

4 Drain siphon (previously installed by the customer)

5 High-pressure hoses (supplied)

6 Water drain pipe (provided with the machine)

⚠

The appliance is supplied without water in the boiler. This is to prevent serious damage if the appliance is exposed to temperatures below 0°C.

Carry out the connections as shown in Picture 3 and taking into account the following instructions:

- **Always use the hoses supplied with the machine to make water mains connections; never use any other hose or pipes already fitted**
- **Make sure that hoses are not kinked, squashed or twisted**
- **Fasten the ring nuts of the hoses firmly but without exerting too much pressure (5 - Pict 3).**

⚠ **WE RECOMMEND THE INSTALLATION OF A WATER SOFTENER TO GRANT A LONG LIFE TO THE APPLIANCE. Install the water softener according to the instructions and regulations provided by the manufacturer.**
The water softener must be placed in an easily accessible place, so as to allow the performance of the regeneration when due, and in general, close to the water drain siphon.

⚠ When there is no water softener, it is necessary to apply a filter on the inlet pipe of the motor pump, in order to prevent impurities from damaging the motor pump or the appliance itself.

MOTOR PUMP (if not built-in)
The motor-driven pump must be installed at a suitable distance in order to avoid either possible drips or water splashes, and also to prevent any salt being introduced into the water softener from spilling on the pump itself.

⚠ Before connecting the hose coming from the motor pump or from the water-softener, in case of appliances with built-in pumps, place it in a bucket and turn on the water tap (1- Pict 3) for a couple of minutes in order to eliminate possible residues from the new hoses and in any case, until the water flows clear.

1.8 DRAIN SYSTEM

Fit the pressurised drain pipe into the appropriate pipe gland of the appliance drain box and insert the other end directly into the drainage siphon prepared for system installation (4 - Pict 3 – page 8). Make sure that there are no kinks and that the pipe has a sufficient slope to drain without any difficulty.

⚠ **Do not fit the drain pipe into basins or buckets placed under the counter as this will increase the possibility of forming dirt deposits and as a result, the spread of bacteria.**

1.9 GAS SYSTEM INSTALLATION DIAGRAM (optional)

KEY

1 Gas tap (previously installed by the customer)

2 Gas supply pipe

☞ **NOTE. The appliance has been equipped by the manufacturer to operate with LPG (G30). Only use pipes that are suitable for the type of gas used and compliant with the laws in force to connect the appliance to the system.**

⚠ If the coffee machine is operated using LPG, make sure that the mains supply pressure is no more than 30 mbar, as higher pressure could damage the appliance.

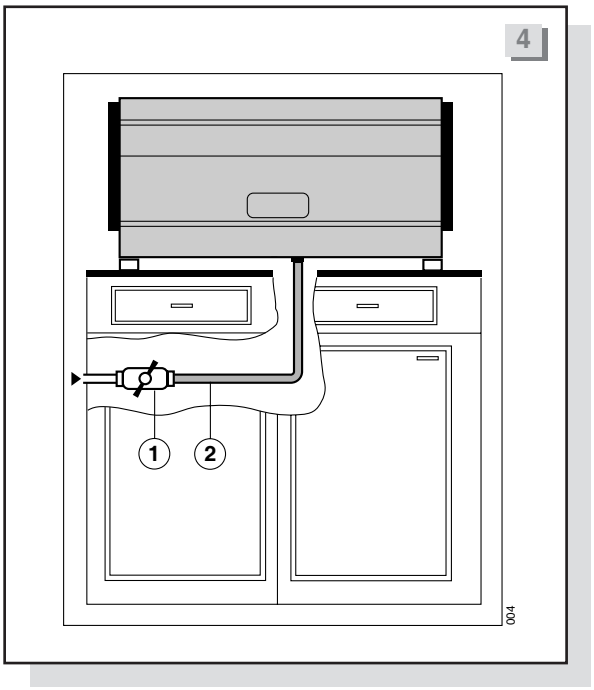

GAS TABLE

NOZZLE GAS TYPE	Ø HOLE G30	Ø HOLE G20	Rated Consumption G30 gr / h	Rated Consumption G20 l / h	POWER RATING Watt	POWER RATING Kcal / h
Mod. 2 GR	**57***	**95***	**116**	**152**	**1600**	**1376**
Mod. 3 GR	**75***	**118***	**182**	**240**	**2500**	**2150**
Mod. 4 GR	**75***	**118***	**182**	**240**	**2500**	**2150**

☞ **NOTE. The nozzle hole (Ø) in given in hundredths of a millimetre.**

☞ These values refer to the heating phase of the machine, i.e. when the gas pressure switch is fully open (with maximum flame).

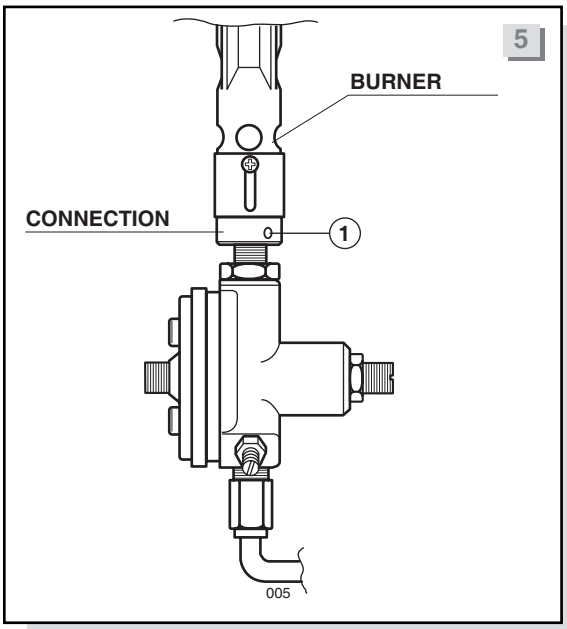

In order to adapt the machine to a different type of gas, replace the nozzle as indicated below and follow the instructions indicated in the gas table.
Loosen the attachment screw -1- (Pict 5) to replace the gas nozzle; then remove the connection towards the pressure switch in order to reach the gas nozzle.
Loosen the nozzle and replace it with a suitable one, according to the type of gas used.
Place the connection in its previous position and tighten the screw -1- (Pict 5) again.

WARNING!
The appliance does not need an exhaust flue. For correct installation of the gas system, comply with the laws in force.

1.10 STARTING UP AND ADJUSTING THE APPLIANCE

See the "USE AND MAINTENANCE MANUAL" provided with every machine for starting up operations.

After switching on the machine, proceed to set it up.

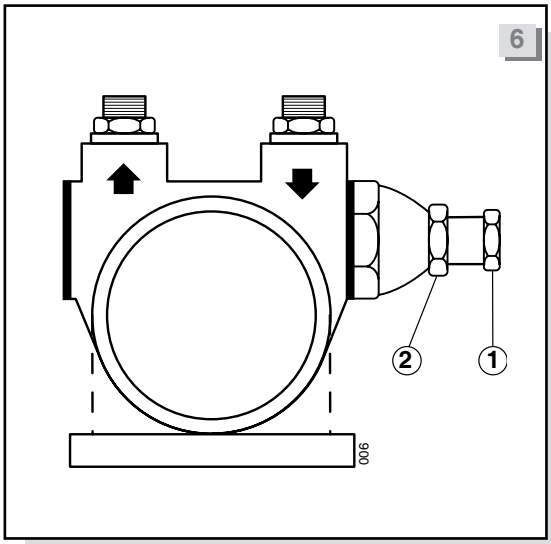

SETTING THE MOTOR PUMP PRESSURE (for appliances without built-in pump)
The proper working pressure ranges from 8 to 10 bar. This pressure can be viewed on the pressure gauge (17) on the appliance by switching on a delivery group (see the "Components" chapter for the model of coffee machine you are using).

To adjust the pressure, turn the adjustment screw (1 - Pict 6) of the motor pump, after loosening the lock nut (2 - Pict 6).
Turn the screw (1 - Pict 6) clockwise to increase pressure and turn it anticlockwise to decrease it: then fasten in place with the lock nut (2 - Pict 6).

NOTE. On machines with built-in pump, the pump is already preset to a pressure of 9 bar by the manufacturer.

1.11 SETTING THE SWITCH ON AND OPERATING TEMPERATURE FOR APPLIANCES WITH GAS SYSTEM

ADJUSTING THE GAS SYSTEM (optional)

After switching on the gas burner, make sure that it is burning correctly. If the flame has a yellow tip, increase primary air suction. If the flames tend to move away from the burner, reduce primary air suction. Primary air is adjusted by moving the mixer axially (Pict 7).
At the end of this operation, fasten the mixer fixing screw.

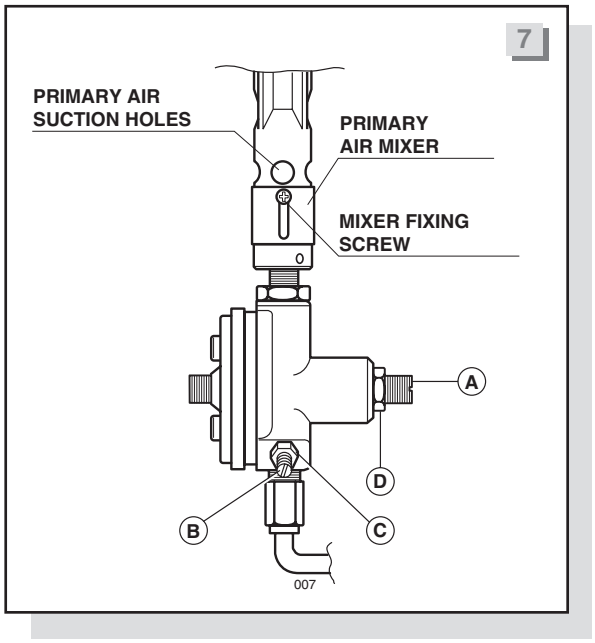

SETTING THE OPERATING TEMPERATURE

When the machine reaches its operating temperature, set the gas pressure switch as follows: loosen lock nuts (C and D - Pict 7). Fully loosen screw (A - Pict 7): if the burner blows down, loosen the screw (B - Pict 7) by approximately two turns and then turn on the burner again.
Again, with the same screw (B - Pict 7), adjust the gas minimum corresponding to a flame about 5 mm high and fasten the lock nut (C - Pict 7). Now slowly fasten nut A until you notice that the minimum flame tends to increase; lastly, tighten the lock nut (D - Pict 7). To check the gas pressure switch, wait for half an hour and make sure that operating pressure has not changed in the meantime.

2

SUPER 3000 RANGE

Carry out the following procedures referring to the chapter "Components" on page 26.

2.1 ULTRA MODEL

This appliance is equipped with an electronic control board which controls the water level in the boiler, and the activation of the motor pump and of the cup warmer heating element.

OPERATING TEMPERATURE ADJUSTMENT FOR ELECTRIC SYSTEM

The electric heating system of the machine is already set by the manufacturer to work at a temperature of **120 °C** in the boiler, corresponding to **1 bar** boiler pressure. This pressure can be viewed on the pressure gauge (4) on the appliance.

To increase or decrease boiler pressure, it is necessary to adjust the mechanical pressure switch (Pict 8) inside the appliance (on the right side) as follows:

- To increase boiler pressure, turn the adjustment screw anticlockwise.
- To decrease boiler pressure, turn the adjustment screw clockwise.

WARNING!
Switch off power when working on the pressure switch.

8

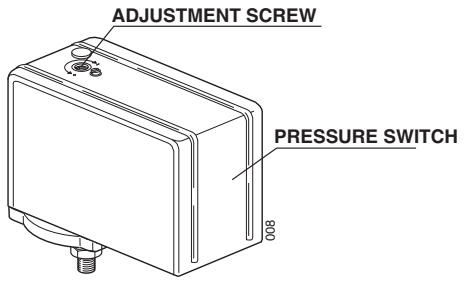

Boiler pressure (operating temperature) is usually modified exclusively in order to adapt the machine temperature to the type of coffee blend used, so as to improve the result in the cup.

ELECTRIC CUP WARMER

Press the cup warmer operating button (24) and check its operating status through the lighting up of the LED (23) on the control panel. To switch it off, press the same button.

2.2 ELETTRIK MODEL

This appliance is equipped with an electronic control board which controls the water level in the boiler, and the activation of the motor pump and of the cup warmer heating element. It also controls the heat regulation of the boiler temperature and manages possible malfunctions to be viewed on the display.

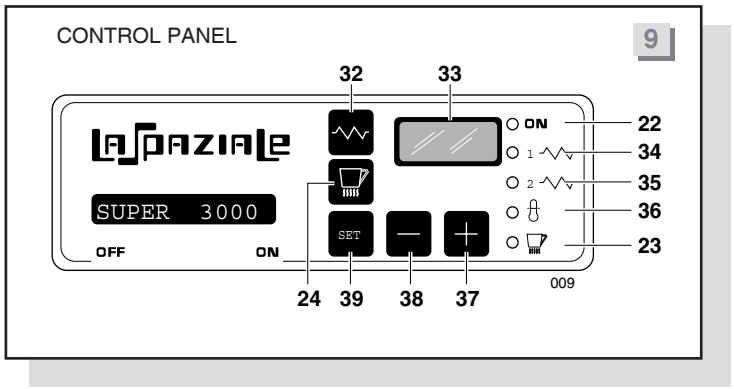

GENERAL DESCRIPTION OF THE CONTROL PANEL

Control lights

22 Electric connection control light.

34 Control light indicating heat regulation status (whether the heating elements of the boiler are enabled).

35 Control light for the operating status of the boiler heating elements.

36 Control light for automatic boiler refill.

23 Control light for electric cup warmer heating elements.

Function of the push-buttons during the standard operating phase (all DIP-SWITCHES set to OFF)

Switching ON/OFF of boiler heating elements.

Switching ON/OFF of cup warmer heating elements.

SET

- Boiler temperature set reading.
- Keeping this button pressed for about 5-6 seconds automatically increases the set temperature by 2 °C and the message “UP” is shown, alternated with the temperature value. To cancel this status, press the button again until the standard operating temperature is shown.

The function of dip-swicthes (micro-switches) on the electronic control board (see the chapter “Diagrams for electronic board connections” page 21).

DIP1
OFF normal operation
ON access to temperature parameter settings

DIP2
OFF normal operation
ON access to control board self-diagnostics

SETTING THE OPERATING TEMPERATURE FOR ELECTRIC HEATING

The electric heating system of the appliance is already set by the manufacturer to work at **120 °C** in the boiler, corresponding to 1 bar boiler pressure and one thermic differential (ΔT) of **1 °C**. These data are viewed on the display (33) of the control panel. It is also possible to check the boiler pressure on the pressure gauge (4) on the appliance.

SETTING NEW OPERATING TEMPERATURE PARAMETERS

NOTE:
- **To change the settings, it is necessary to have access to the electric box inside the control panel (13).**
- **Do not touch high voltage parts with hands or tools; be careful not to wet the electric or electronic box.**

- Move DIP 1 of the control box to the ON position; "**P1**" (code for temperature programming) will appear on the display followed by "**120 C°**".
- Press buttons + or − to vary this setting (setting range possible between **105 °C min. - 127 °C max**.).
- Press the button SET to confirm the setting.
- "**P2**" will appear on the display (ΔT programming code = thermic differential), followed by " **1 °C**".
- Press buttons + or − to vary the setting (setting range from **0.5 °C min. to - 5 °C max.**).
- Press the button SET (39) to confirm the setting and "**P3**" will appear on the display (probe calibration setting, already set by the manufacturer).

WARNING! Do not change this setting, since it has already been set by the manufacturer.

- Press the button SET, again and move DIP 1 to the OFF position.
- Close the electric control box and check the operating function of the new parameters that have been set.

CONTROL BOARD SELF DIAGNOSTICS

This function is used exclusively by the manufacturer of the control board.

ELECTRIC CUP WARMER

Press the cup-warmer function button and check its operating status through the switching on of the LED on the control-panel (23). To switch it off press the same button.

2.3 SELETRON MODEL

This appliance is equipped with an electronic control board which controls the water level in the boiler, the activation of the motor pump and the cup warmer heating element, the doses of each delivery group (since the appliance has a water dosing system based on flow meters), and the heat regulation of the boiler temperature, and it also shows any possible malfunctions on the display.

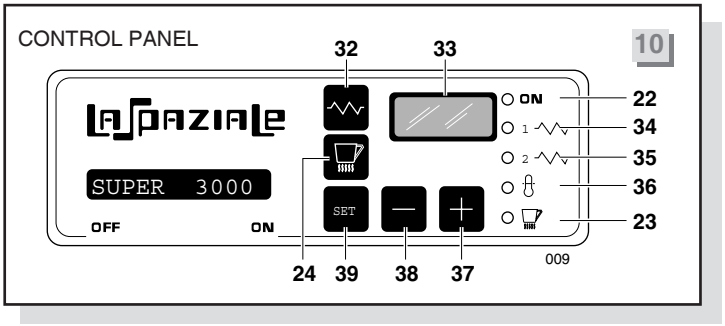

GENERAL DESCRIPTION OF THE CONTROL PANEL

Control lights

22 Electric connection control light.

34 Control light indicating heat regulation status (whether the heating elements of the boiler are enabled).

35 Control light for the operating status of the boiler heating elements.

36 Control light for automatic boiler refill.

23 Control light for electric cup warmer heating elements.

Function of pushbuttons during standard operating phase (all DIPSWITCHES set to OFF)

Switching ON/OFF of boiler heating elements.

Switching ON/OFF of cup warmer heating elements.

SET

Boiler temperature set reading.

- Pressing this button will show the set temperature of the boiler.
- Keeping this button pressed for about **5-6 seconds**, automatically increases the set temperature by **2 °C** and the message "**UP**" is shown, alternated with the temperature value. To cancel this status, press the button again until the standard operating temperature is shown.

Coffee-counters display: pressing and holding down this button causes the indication " **d1**" (dose 1) to appear followed by the number corresponding to the total of all "doses 1" (short coffee) of all delivery groups; releasing and pressing again, the indication "**d2**" is displayed followed by the number corresponding to the total of all "doses 2" (long coffee) of all delivery groups; same procedure to visualize the two remaining doses, "**d3**" (2 short coffees) and "**d4**" (2 long coffees).

View of the total number of all coffees delivered by the appliance (delivery operations carried out with the free flow delivery button are not counted) *.

NOTE. The above buttons have a delayed operation (about 0.5 seconds) in order to prevent their function from being activated by accident.

Functions of the dip-switches (micro-switches) on the electronic control board (see chapter "Electronic control board connection diagrams" page 21).

DIP1
OFF normal operation
ON access to temperature parameter settings

DIP2
OFF normal operation
ON access to control board self-diagnostics

DIP3
OFF normal operation
ON access to dispensing group settings

DIP4
OFF normal operation
ON deactivation of the button * on all touchpads

SETTING NEW OPERATING TEMPERATURE PARAMETERS

The heating system of the appliance is already set by the manufacturer to work at **120 °C** in the boiler, corresponding to 1 bar boiler pressure and a thermic differential (ΔT) of **1 °C**.
These data are viewed on the display (33) of the control panel. It is also possible to check the boiler pressure on the pressure gauge (4) on the appliance.

The operations required to change the operating temperature parameters above (default data) are described in the following paragraph.

SETTING NEW OPERATING TEMPERATURE PARAMETERS

NOTE:
- **To change the settings, it is necessary to have access to the electric box inside the control panel (13).**
- **Do not touch high voltage parts with hands or tools; be careful not to wet the electric or electronic box.**

- Move DIP 1 of the control box to ON; the display will show "**P1**" (code for temperature programming), followed by "**120 °C**".
- Press buttons + or − to vary the setting (setting range from **105 °C min. - 127 °C max.**).
- Press the button SET to confirm the setting.
- At this point, "**P2**" appears on the display (ΔT programming = thermic differential), followed by " **1 °C**".
- Press buttons + or − to vary the setting (setting range from **0.5 °C min. to 5 °C max.**).
- Press the button SET to confirm the setting and "**P3**" will appear on the display (probe calibration setting, already performed by the manufacturer).

WARNING! Do not change this setting, since it has already been set by the manufacturer.

- Press the button SET, again and move DIP 1 to the OFF position.
- Close the electric control box and check the operating function of the new parameters that have been set.

CONTROL BOARD SELF DIAGNOSTICS

This function is used exclusively by the manufacturer of the control board.

DOSE SETTING

NOTE. The 4 automatic doses have already been set by the manufacturer as follows:

1st DOSE: 90 pulses 3rd DOSE: 145 pulses
2nd DOSE: 100 pulses 4th DOSE: 160 pulses

To change these default settings, proceed as follows:

1° Move DIP 3 to ON and press the button –, preset the display for pulse counting (the number "Ø" is shown).

2° Attach a filter holder for one ground coffee dose (11 b) to the 1st group on the right; place a cup below the filter holder and push the button * on the corresponding touchpad.

3° When the desired amount of coffee has been delivered into the cup, press the button * again and take note of the number of pulses on the display (33).

NOTE: Follow the same steps to program the remaining doses using the 1-cup filter holder (11b) or the 2-cup holder (11a) according to the dose to be programmed.

4° Now hold down the buttons + or – for about **5 seconds**, until the display (33) shows "**E1**", (setting of the 1st delivery group from the right) and all of the LEDs on the right-hand touchpad start to flash.

5° Press the button "1 short coffee" (25) on the touchpad and use buttons + or – to change the setting on the display (33), to the same number of pulses noted previously for the "1 short coffee" dose.

6° Press the button "1 short coffee" (25) on the touchpad again to confirm and store the new setting.

7° Repeat this operation for the other 3 buttons on the same touchpad (26-27-28).
After programming the first touchpad, if you also want to copy the same doses to the other pads, hold down the button SET for about **5 seconds** until all of the LEDs on all of the appliance touchpads light up.

8° After this operation, move DIP 3 to the OFF position and close the electronic box.

NOTE. To set a different dose for each delivery group, once at point 7, press the button * on the touchpad for the group for which the dose is to be changed and repeat the programming steps from point 1.

According to the touchpad that you are programming, the display (33) will show the code of the delivery units that you are operating on:

E1 1st group from the right

E2 2nd group from the right

E3 3rd group from the right

E4 4th group from the right

NOTE
When you set a dose, you select a number of pulses on the flow meter so as to get the coffee amount required. Each dose may be set from **50 to 1999 pulses**.
However, since the display shows three digits only, when it exceeds 999 pulses, it starts again from 0, while the decimal digits on the display are flashing (this means that you have exceeded 1000 pulses).
When you are using the display as a pulse counter, this is automatically reset to '0' between one coffee delivery operation and the next.

WARNING!
Should the power suddenly cut off while entering new data, check parameter values once power is back again, because the data you have set might not have been saved properly (in this specific event, the alarm A00 appears on the display. In this case repeat the data setting procedure).
We recommend that you do not select the self-diagnostic program at the same time as the data setting program.

ELECTRIC CUP WARMER

Press the cup warmer function button and check its operating status through the switching on of the LED on the control-panel (23). To switch it off press the same button.

2.4 ALARMS CONTROL - ELETTRIK – SELETRON MODELS

☞ **NOTE. The alarm messages can be divided into two different types: blocking and non-blocking alarms.**

A00 **Loss of data**
This alarm is not a blocking one.
It appears when the control board has lost the parameters set by the installer; therefore, the appliance will continue to operate but with default settings. Enter new TEMPERATURE parameter settings to cancel this alarm (the SELETRON model will also require DOSE settings). If the problem persists, it is necessary to replace the control board.

A01 **High temperature**
This is a blocking alarm.
If the coffee machine reaches **135 °C**, for any reason, this alarm appears and blocks all functions of the machine. This alarm automatically disappears when temperature drops to below **130 °C**, thus reactivating all functions of the machine. Make sure the appliance has sufficient air circulation.

A02 **Damaged probe**
This is a blocking alarm.
This alarm signals that the boiler temperature probe is out of range.
Alternatively to **A02**, the display may indicate:
"**UFL**" if the probe is reading a temperature below **0 °C** or the probe is disconnected.
"**OFL**" if the probe is reading a temperature higher than **140 °C** or if the probe is short circuited.
In both cases check the temperature probe connections to the electric control board and replace the probe.

A03 **Damaged automatic water refill system**
This is a blocking alarm.
This alarm signals that the automatic water refill system of the boiler has been on for more than **4 minutes**.
To cancel this alarm switch off the appliance for a while using the main switch (3). Check the boiler filler system, should this alarm appear again.

A04 **Free-flow delivery time-out ✱ 1st group**
This is not a blocking alarm.
This alarm signals that the 1st delivery group from the right has been switched on for more than **4 minutes**.
To cancel this alarm, press the button causing the group to block again (the LED of this button will flash during the block).

A05 **Free-flow delivery time-out ✱ 2nd group**
This is not a blocking alarm.
This alarm signals that the 2nd delivery group from the right has been switched on for more than **4 minutes**.
To cancel this alarm, press the button causing the group to block again (the LED of this button will flash during the block).

A06 **Free-flow delivery time-out ✱ 3rd group**
This is not a blocking alarm.
This alarm signals that the 3rd delivery group from the right has been switched on for more than **4 minutes**.
To cancel this alarm, press the button causing the group to block again (the LED of this button will flash during the block).

A07 **Free-flow delivery time-out ✱ 4th group**
This is not a blocking alarm.
This alarm signals that the 4th delivery group from the right has been switched on for more than **4 minutes**.
To cancel this alarm, press the button causing the group to block again (the LED of this button will flash during the block).

A10 **Feeding power anomaly**
This is a momentary blocking alarm.
It signals that the feeding power is outside the standard range: the electric supply system has to be checked by qualified personnel. This alarm automatically disappears when the power returns to normal.
The standard range of the supply power goes from **180 Volts minimum to 270 Volts maximum**.

A11 **Damaged flow meter 1st group / Fine grinding**
This is not a blocking alarm.
Lack of pulses for the 1st flow-meter for the first group from the right.
Coffee delivery is stopped after **10 seconds** causing the LED to flash on the button that has been pressed.
To cancel these alarms press the same button again.
Check the grinding fineness of the coffee and check and replace the flow meter if necessary.

A12 **Damaged flow meter 2nd group**
This is not a blocking alarm.
Lack of pulses for the 2nd flow meter for the second group from the right.
Coffee delivery is stopped after **10 seconds** causing the LED to flash on the button that has been pressed.
To cancel these alarms press the same button again.
Check the grinding fineness of the coffee and check and replace the flow meter if necessary.

A13 **Damaged flow meter 3rd group**
This is not a blocking alarm.
Lack of pulses for the 3rd flow meter for the third group from the right.
Coffee delivery is stopped after **10 seconds** causing the LED to flash on the button that has been pressed.
To cancel these alarms press the same button again.
Check the grinding fineness of the coffee and check and replace the flow meter if necessary.

A14 **Damaged flow meter 4th group**
This is not a blocking alarm.
Lack of pulses for the 4th flow meter for the fourth group from the right.
Coffee delivery is stopped after **10 seconds** causing the LED to flash on the button that has been pressed.
To cancel these alarms press the same button again.
Check the grinding fineness of the coffee and check and replace the flow meter if necessary.

2.5 DIAGRAMS FOR ELECTRONIC BOARD CONNECTION

ULTRA

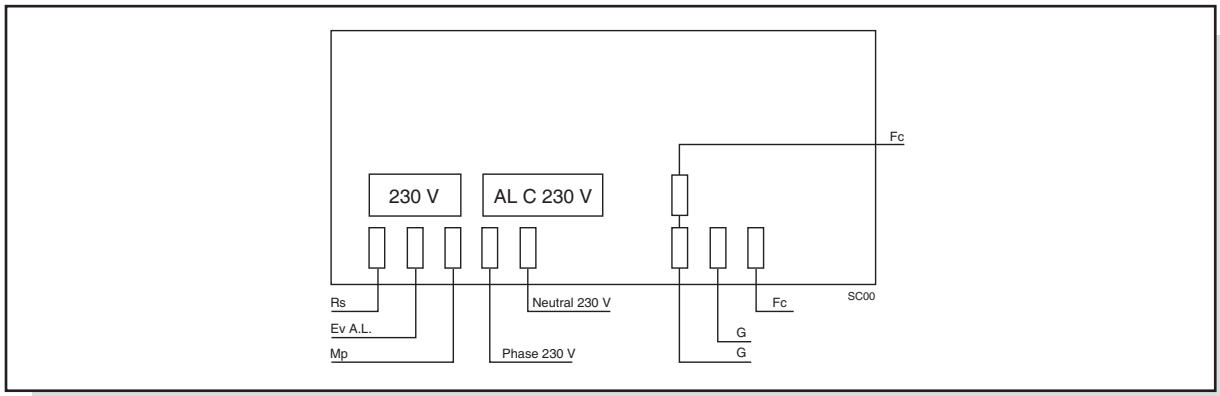

ELETTRIK

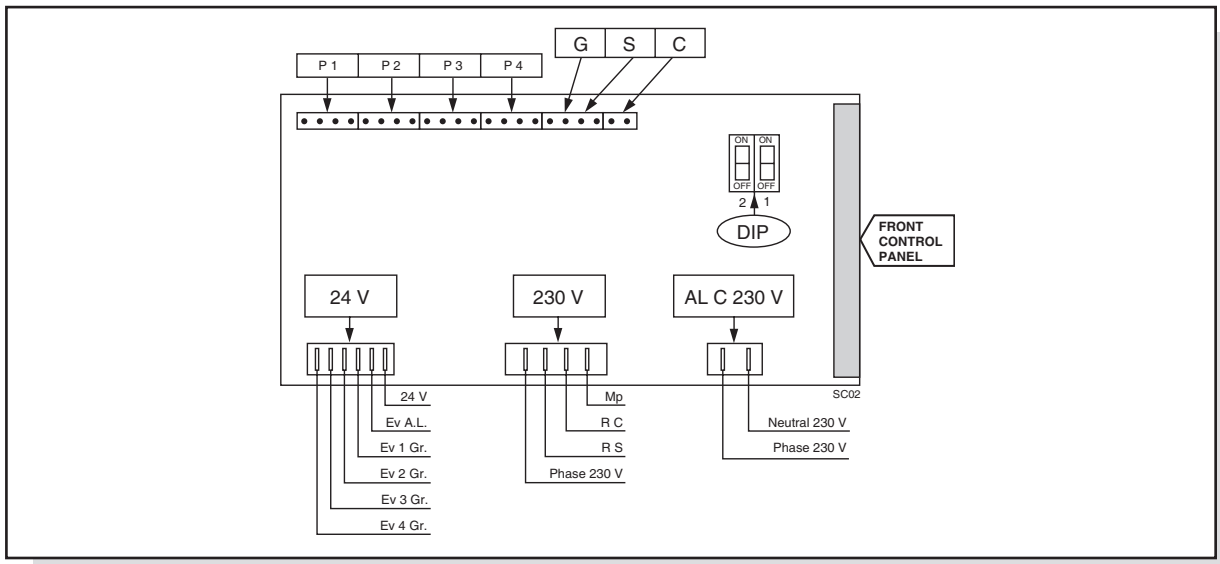

SELETRON

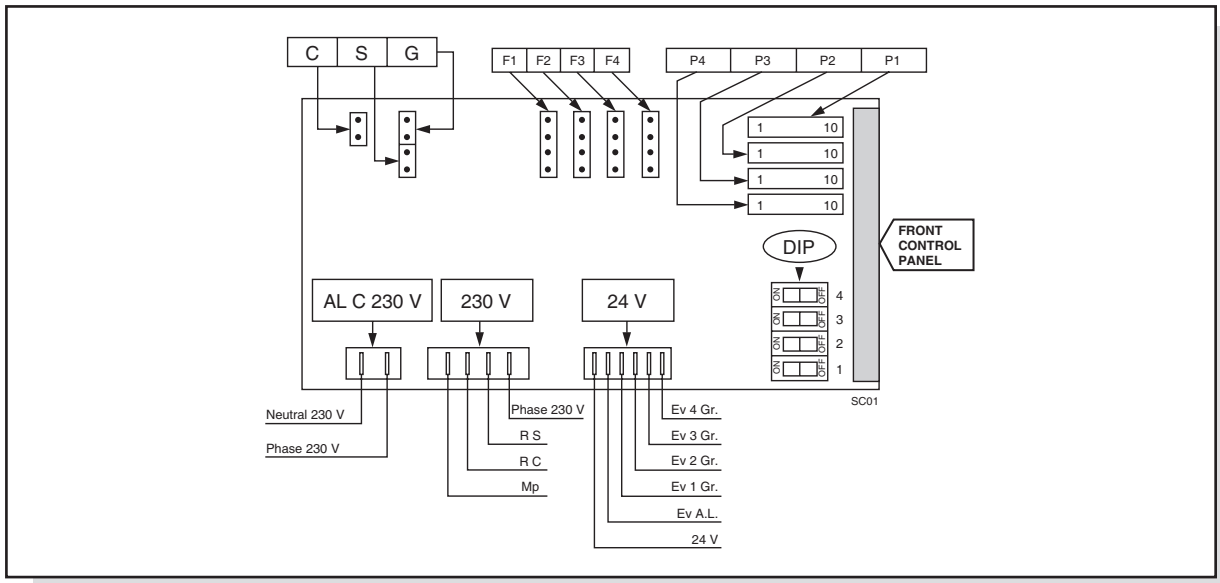

2.6 WIRING DIAGRAMS

ULTRA

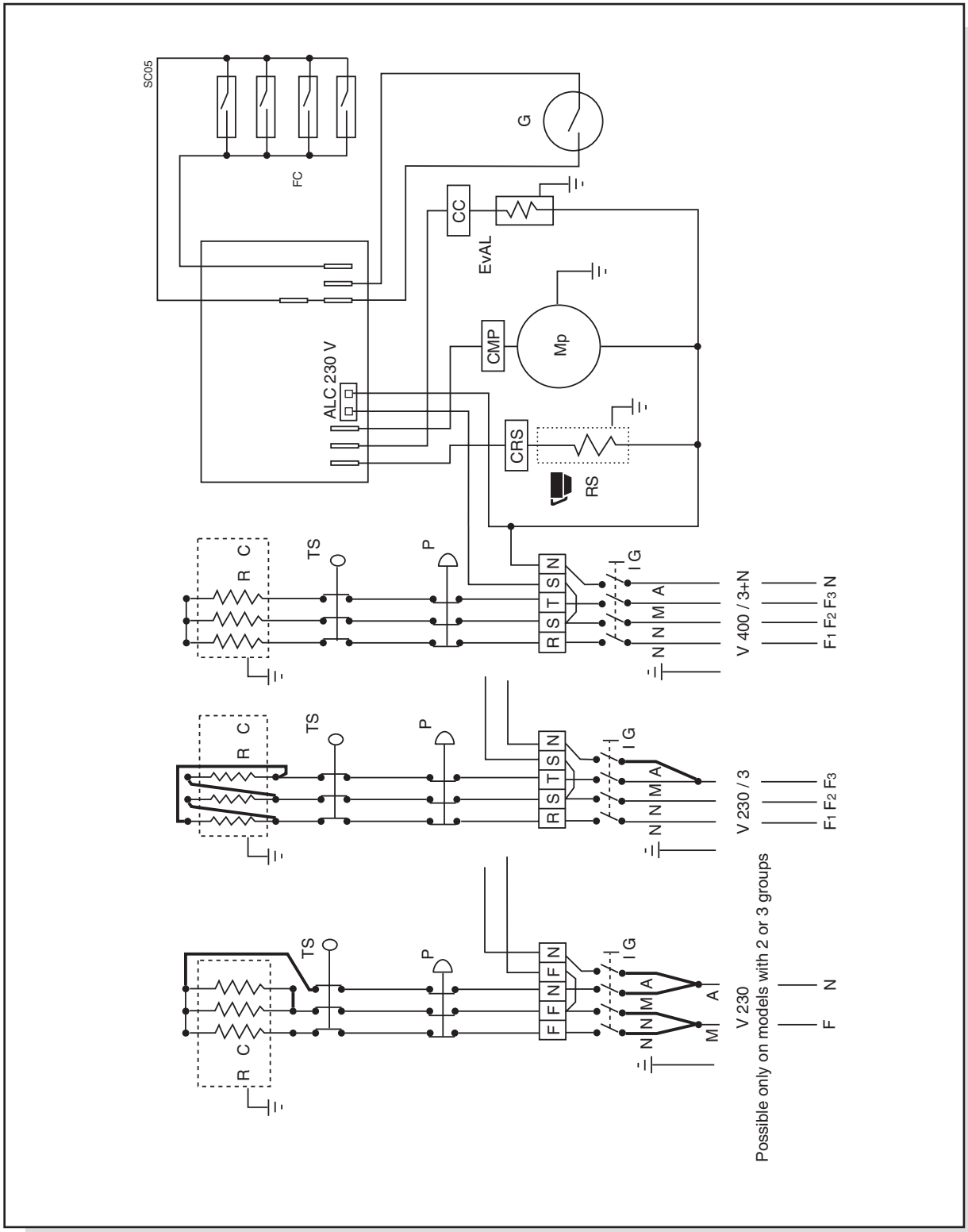

⚠ **TRANSFORMATION FROM 400/3+N TO 230 SINGLE PHASE POSSIBLE ONLY ON MODELS WITH 2-3 GROUPS**

ELETTRIK

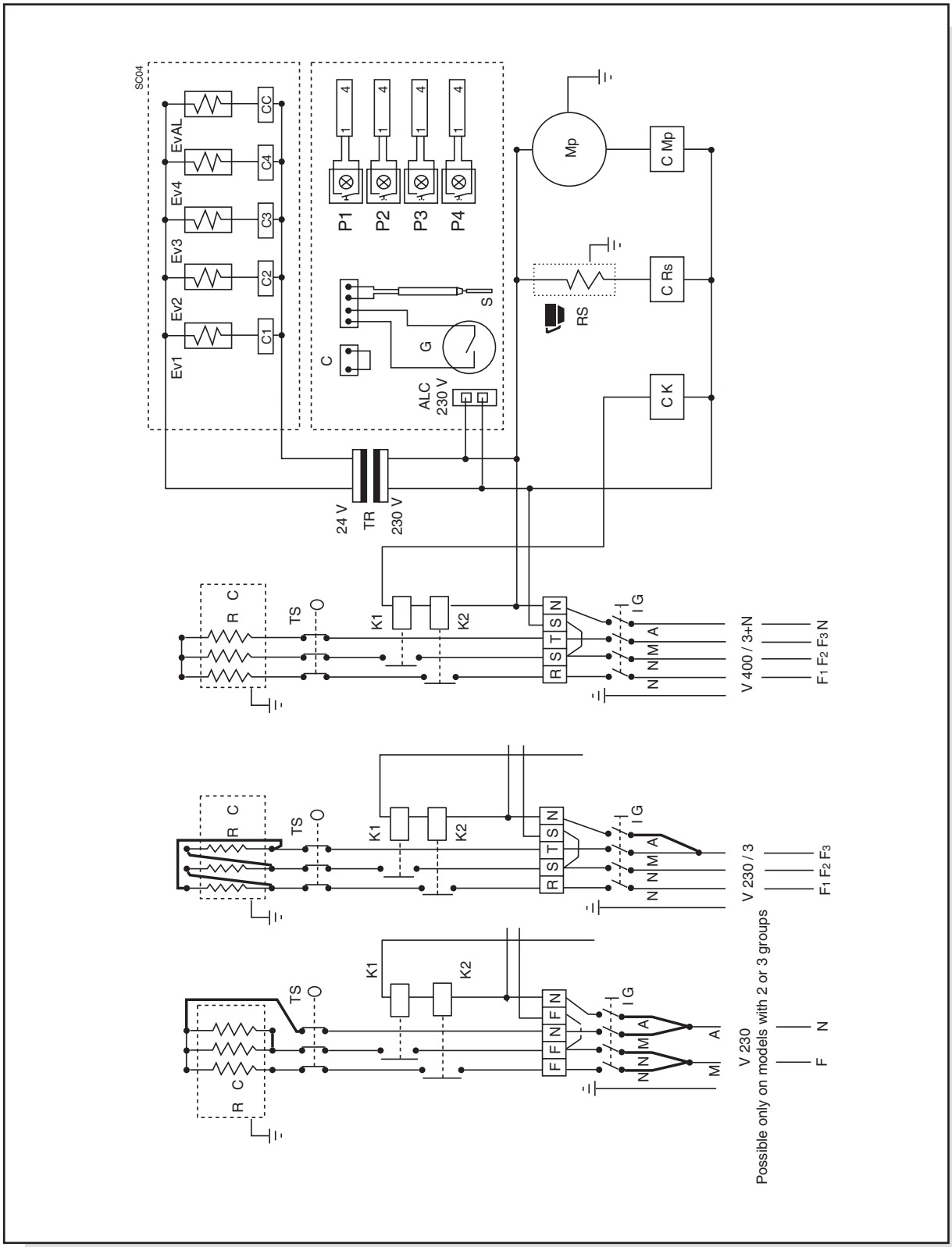

⚠ **TRANSFORMATION FROM 400/3+N TO 230 SINGLE PHASE POSSIBLE ONLY ON MODELS WITH 2-3 GROUPS**

SELETRON

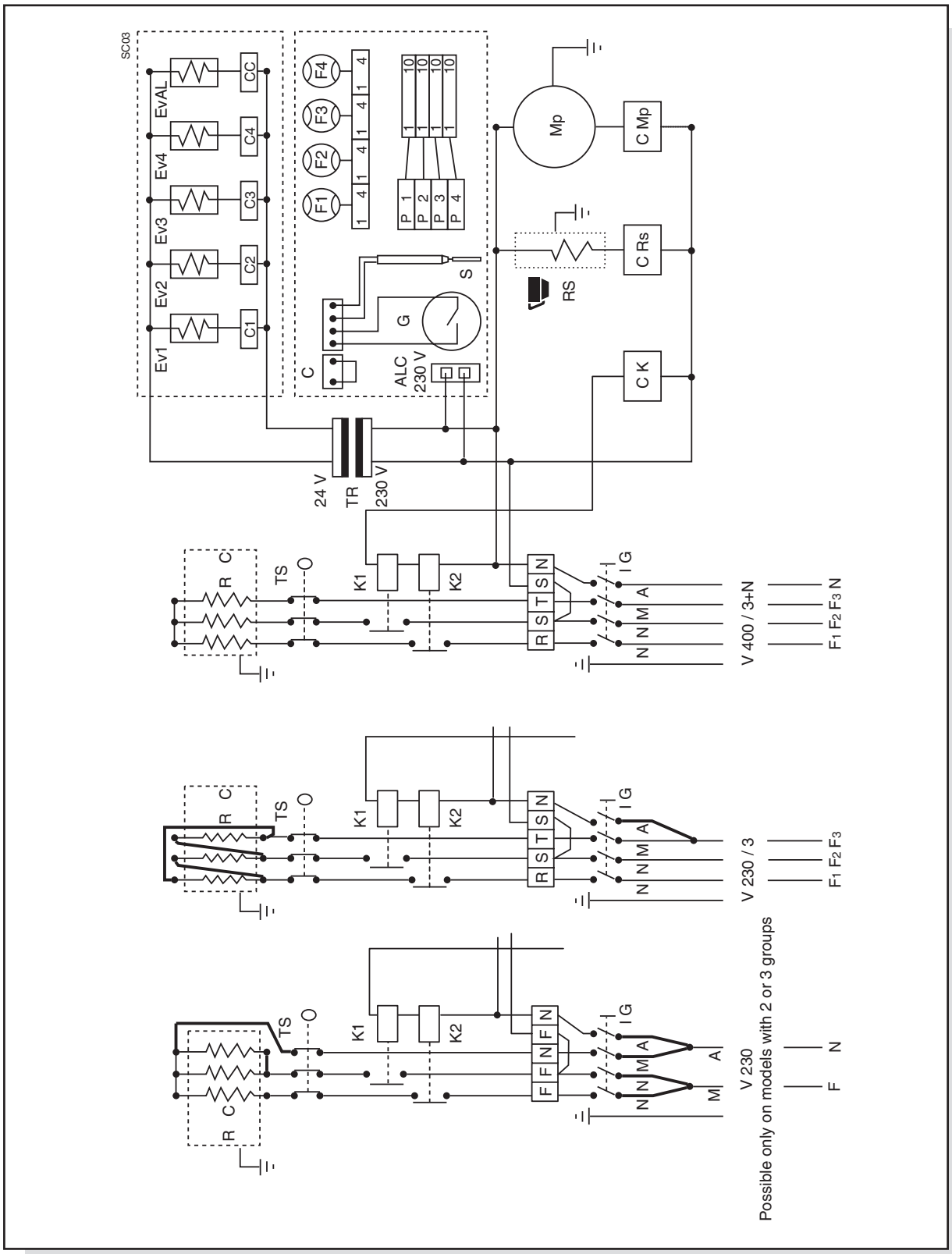

⚠ **TRANSFORMATION FROM 400/3+N TO 230 SINGLE PHASE POSSIBLE ONLY ON MODELS WITH 2-3 GROUPS**

KEY TO WIRING DIAGRAMS

- **ALC** Control board power supply
- **MP** Motor pump
- **RS** Cup warmer heating element
- **RC** Boiler heating element
- **EVAL** Solenoid valve, automatic water refill
- **EV1** Solenoid valve, 1st group from the right
- **EV2** Solenoid valve, 2nd group from the right
- **EV3** Solenoid valve, 3rd group from the right
- **EV4** Solenoid valve, 4th group from the right
- **P1** Touchpad, 1st group from the right
- **P2** Touchpad, 2nd group from the right
- **P3** Touchpad, 3rd group from the right
- **P4** Touchpad, 4th group from the right
- **PS** Cup warmer button
- **SL** or **G** Control for water level in the boiler
- **S** Temperature probe in the boiler
- **C** Jumper to activate all control board functions
- **F1** Flow meter for 1st group from the right
- **F2** Flow meter for 2nd group from the right
- **F3** Flow meter for 3rd group from the right
- **F4** Flow meter for 4th group from the right
- **DIP1** Microswitch to have access to temperature and ΔT setting
- **DIP2** Microswitch to have access to self-diagnostic mode
- **DIP3** Microswitch to have access to dose setting (**SELETRON ONLY**)
- **DIP4** Not used
- **IG** Main switch
- **K1** and **K2** Static relays
- **TS** Safety thermostat with manual reset
- **TR** Transformer for solenoid valve
- **CK** Control board relay controlling boiler heating element
- **CRS** Control board relay controlling the cup warmer heating element
- **CMP** Control board relay controlling the motor pump
- **C1** Control board relay controlling the solenoid valve, 1st group from the right
- **C2** Control board relay controlling the solenoid valve, 2nd group from the right
- **C3** Control board relay controlling the solenoid valve, 3rd group from the right
- **C4** Control board relay controlling the solenoid valve, 4th group from the right
- **CC** Control board relay to control the automatic water level solenoid valve
- **P** Heating element pressure switch
- **FC** Delivery group microswitches
- **SP** Electric connection control light

2.7 PARTS

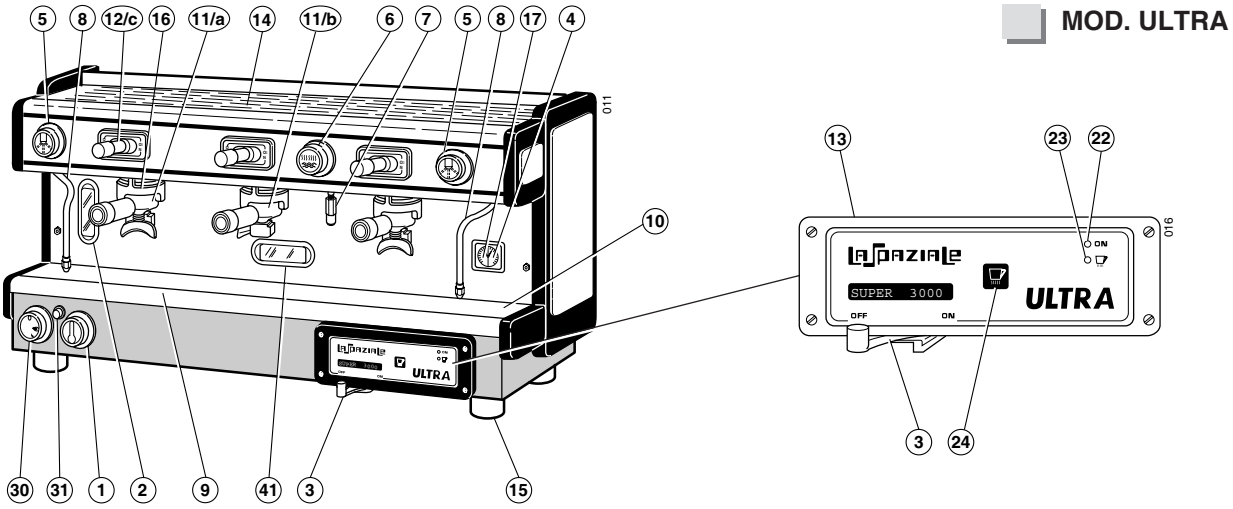
MOD. ULTRA
5 8 12/c 16 11/a 14 11/b 6 7 5 8 17 4
011
13 23 22
10
016
LA PAZIALE
SUPER 3000
ULTRA
ON
OFF
3 24
30 31 1 2 9 41 3 15

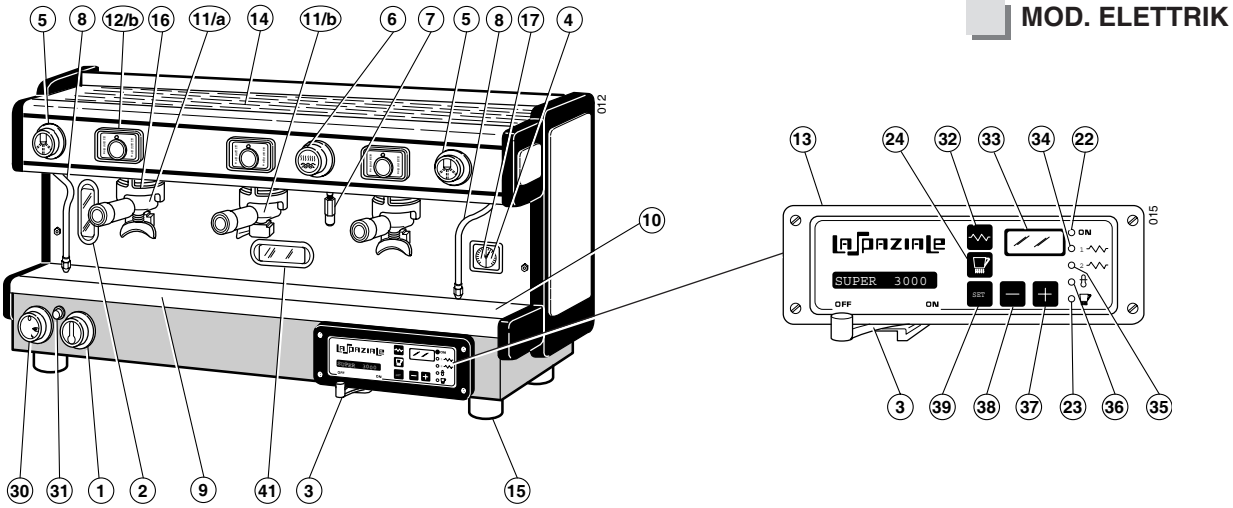
MOD. ELETTRIK
5 8 12/b 16 11/a 14 11/b 6 7 5 8 17 4
012
13 24 32 33 34 22
10
015
LA PAZIALE
SUPER 3000
SET
ON
OFF
3 39 38 37 23 36 35
30 31 1 2 9 41 3 15

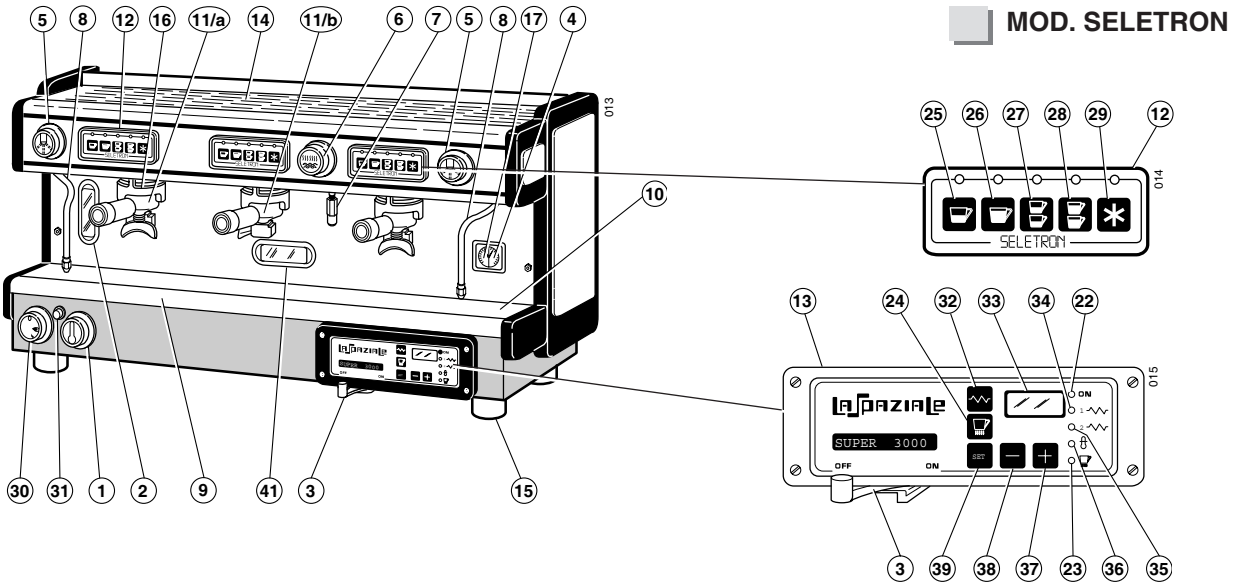
MOD. SELETRON
5 8 12 16 11/a 14 11/b 6 7 5 8 17 4
013
25 26 27 28 29 12
014
SELETRON
10
13 24 32 33 34 22
015
LA PAZIALE
SUPER 3000
SET
ON
OFF
3 39 38 37 23 36 35
30 31 1 2 9 41 3 15

KEY TO PARTS

1 Tap for manual boiler filling
2 Boiler water level gauge
3 Main switch
4 Boiler pressure gauge
5 Steam delivery knob
6 Hot water delivery knob
7 Hot water spout
8 Steam wand
9 Water drip tray
10 Drip tray grid
11a 2-cup filter holder
11b 1-cup filter holder
12 Group delivery control with automatic and manual doses
12b Group delivery control – Mod. EP – Super Elettrik
12c Group delivery control - New 3000 - Super Ultra models
13 Control panel
14 Top cup grid
15 Adjustable feet for the appliance
16 Coffee delivery group
17 Motor pump pressure gauge
22 Power control light
23 Electric cup warmer control light
24 Electric cup warmer button
25 1 short coffee button
26 1 long coffee button
27 2 short coffes button
28 2 long coffee button
29 Manual delivery button
30 Control knob for gas delivery (optional)
31 Piezoelectric lighter for gas (optionale)
32 “ON/OFF” button for appliance electric heating
33 Display
34 Control light for appliance electric heating status
35 Control light for heating element status
36 Control light for automatic boiler refill status
37 Display datum increase
38 Display datum decrease
39 Setting confirm button
41 Opening for gas burner inspection

3

NEW - RAPID - SPAZIO - SPECIAL RANGE

☞ **Carry out the following operations referring to the chapter "Components" (page 38 to page 41).**

3.1 MODEL 3000 - EC (except for Spazio range) - EP

☞ **All these appliances are equipped with an electronic control board that controls the water level in the boiler and the activation of the motor pump.**

OPERATING TEMPERATURE ADJUSTMENT FOR THE ELECTRIC HEATING SYSTEM

The electric heating system of the appliance is already set by the manufacturer to operate at a temperature of **120 °C** in the boiler, corresponding to **1 bar** boiler pressure. Boiler pressure is viewed on the pressure gauge (4) situated on the base of the appliance.

In order to increase or decrease the boiler pressure, it is necessary to operate on the electric pressure switch (Pict 11) which is inside the machine (on the right side), as indicated here below:

- Turn the adjustment screw anti-clockwise to increase boiler pressure.
- Turn the adjustment screw clockwise to decrease it.

⚠

WARNING!
Cut off power while operating on the pressure switch.

11

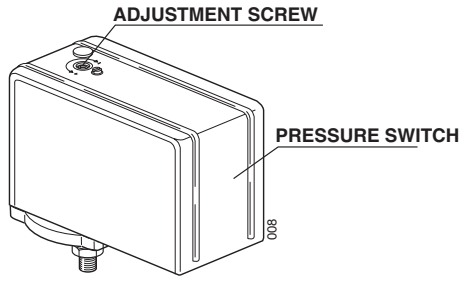

Boiler pressure (at operating temperature) is normally modified exclusively in order to adapt the machine temperature to the particular type of coffee blend so as to obtain the best result in the cup.

ELECTRIC CUP WARMER (optional)

In the models equipped with the electric cup warmer, to activate it, move the main switch button (3) from position **1** (standard operation of the machine) to position **2**. To deactivate it, move it back to position **1**.

3.2 EK MODEL

☞ **This appliance has an electronic control board which controls water level in the boiler, the activation of the motor pump and the doses of the delivery groups (since the appliance has a water dosing system based on flow meters). It also manages the visualization of any possible malfunction through the LEDs on the touchpad.**

OPERATING TEMPERATURE ADJUSTMENT FOR ELECTRIC HEATING SYSTEM

The electric heating system of the machine is already set by the manufacturer to work at a temperature of **120 °C** in the boiler, corresponding to **1 bar** boiler pressure. This pressure can be viewed on the pressure gauge (4) on the appliance.

In order to increase or decrease the boiler pressure, it is necessary to operate on the electric pressure switch (Pict 12) which is inside the machine (on the right side), as indicated here below:

- Turn the adjustment screw anti-clockwise to increase boiler pressure.
- Turn the adjustment screw clockwise to decrease it.

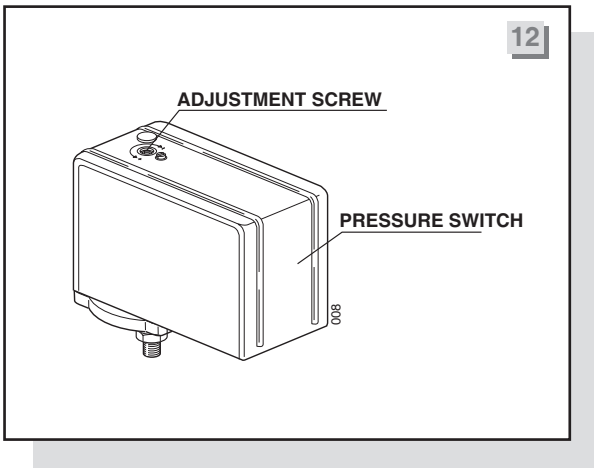

⚠ **WARNING!**
Cut off power while operating on the pressure switch.

Boiler pressure (at operating temperature) is normally modified exclusively in order to adapt the machine temperature to the particular type of coffee blend so as to obtain the best result in the cup.

GROUP DOSE SETTING

1° Hold down the button ✱ of the first touchpad on the right (1st GROUP) for about **5 seconds** until all LEDs on the touchpad light up.

2° Within **30 seconds** fasten a filter holder (11 b) containing a dose of ground coffee to the group; put a cup below the filter holder and press the button “1 short coffee” (25) on the corresponding touchpad. The LED for the selected dose will switch off to indicate that the dose is being set.

3° When the coffee reaches the required dose, press the button “1 short coffee” (25) again to stop coffee delivey and confirm the required dose.

4° Repeat the same procedure for the other buttons (26-27-28) always referring to the first touchpad.

☞ **NOTE. Follow the above procedure to set all remaining doses, using the 1-cup coffee holder (11 b) or the 2-cup holder (11 a) according to the dose to be set.**

To quit the programming phase, press the button ✱ or alternatively, wait **30 seconds** to quit the phase automatically.

⚠ **WARNING!**
By setting the doses on the first touchpad on the right, automatically the other groups will be acquiring the same doses; if you want to set a group with different doses, repeat the same dose setting procedure on the touchpad corresponding to the group you want to program differently.

☞ **NOTE. The water level in the boiler can either be controlled by conduction probe (Rapid and Spazio models) or by magnetic reed (floater) (NEW model).**

In case of replacement of the control board in Rapid and Spazio models, it is necessary to program it so as to confirm the water level control by conduction probe.

For programming procedures, please follow the instructions below:

1° With the main switch (3) in position "**0**" (appliance off) press and hold down the button "1 short coffee" (25) of the 1st group touchpad (first on the right - Pict 13).

2° Switch on the appliance by moving the main switch (3) in position "**1**" (appliance on); after about **2 seconds** the LED for the button pressed will light up.

3° Release the button "1 short coffee" (25) then switch the appliance off and then on again using the main switch (3) to confirm the setting.

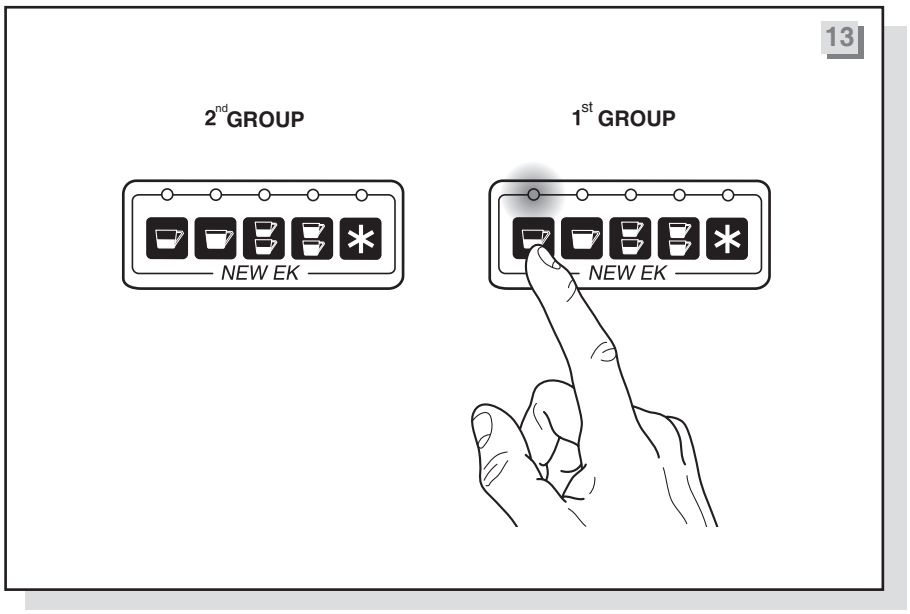

⚠ **WARNING!**
The machine is now working with probe water level control.

ELECTRIC CUP WARMER (optional) NEW - RAPID - SPAZIO

In the models equipped with the electric cup warmer, to activate it, move the main switch button (3) from position **1** (standard operation of the machine) to position **2**. To deactivate it, move it back to position **1**.

ELECTRIC CUP WARMER (optional) SPECIAL

The appliances can also be equipped with an electric cup warmer (as optional) for an additional cup heating. To switch on the cup warmer, press the button (9).
Press the same button to switch it off.

3.3 ALARM CONTROL – EK MODEL

1. LED CORRESPONDING TO THE COFFEE DOSE ON DELIVERY MODE, FLASHING AFTER 5-6 SECONDS:

- Coffee ground too finely.
- The flow meter for the delivery group is not recording any pulses.

2. ALL LEDS CORRESPONDING TO ALL DOSES ON ALL TOUCHPADS FLASHING:

- The automatic filling function for the boiler tank has been operating for more than **4 minutes/6 minutes for the SPECIAL with 3 groups** (total machine block). To return to the standard operating phase, switch the machine off using the main ON/OFF switch (3). If this problem is repeated frequently, check the proper operation of the automatic refill system.

3.4 WIRING DIAGRAMS

NEW EC - 3000

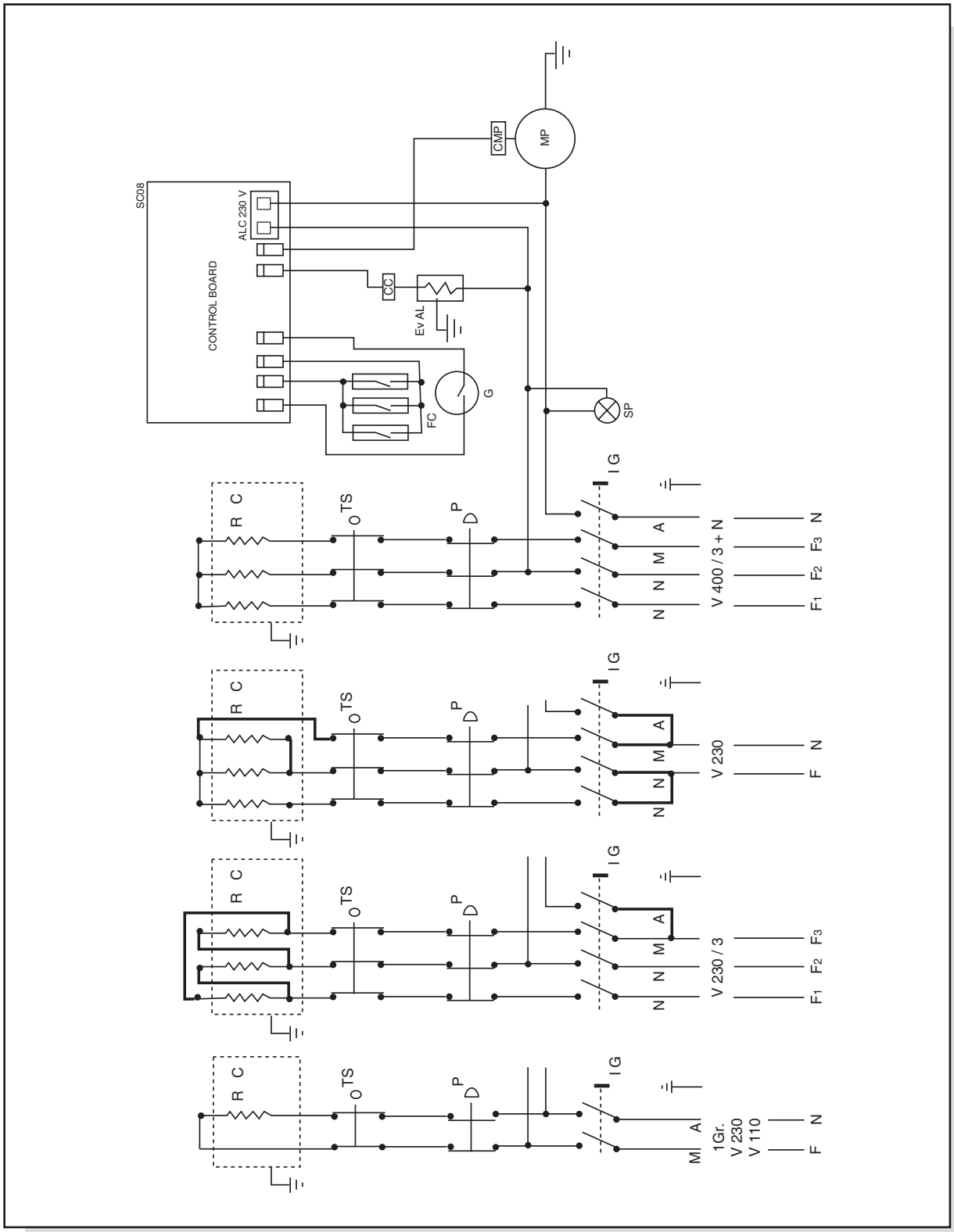

⚠ **TRANSFORMATION FROM 400/3+N TO 230 SINGLE PHASE POSSIBLE ONLY ON MODELS WITH 2-3 GROUPS**

NEW EP

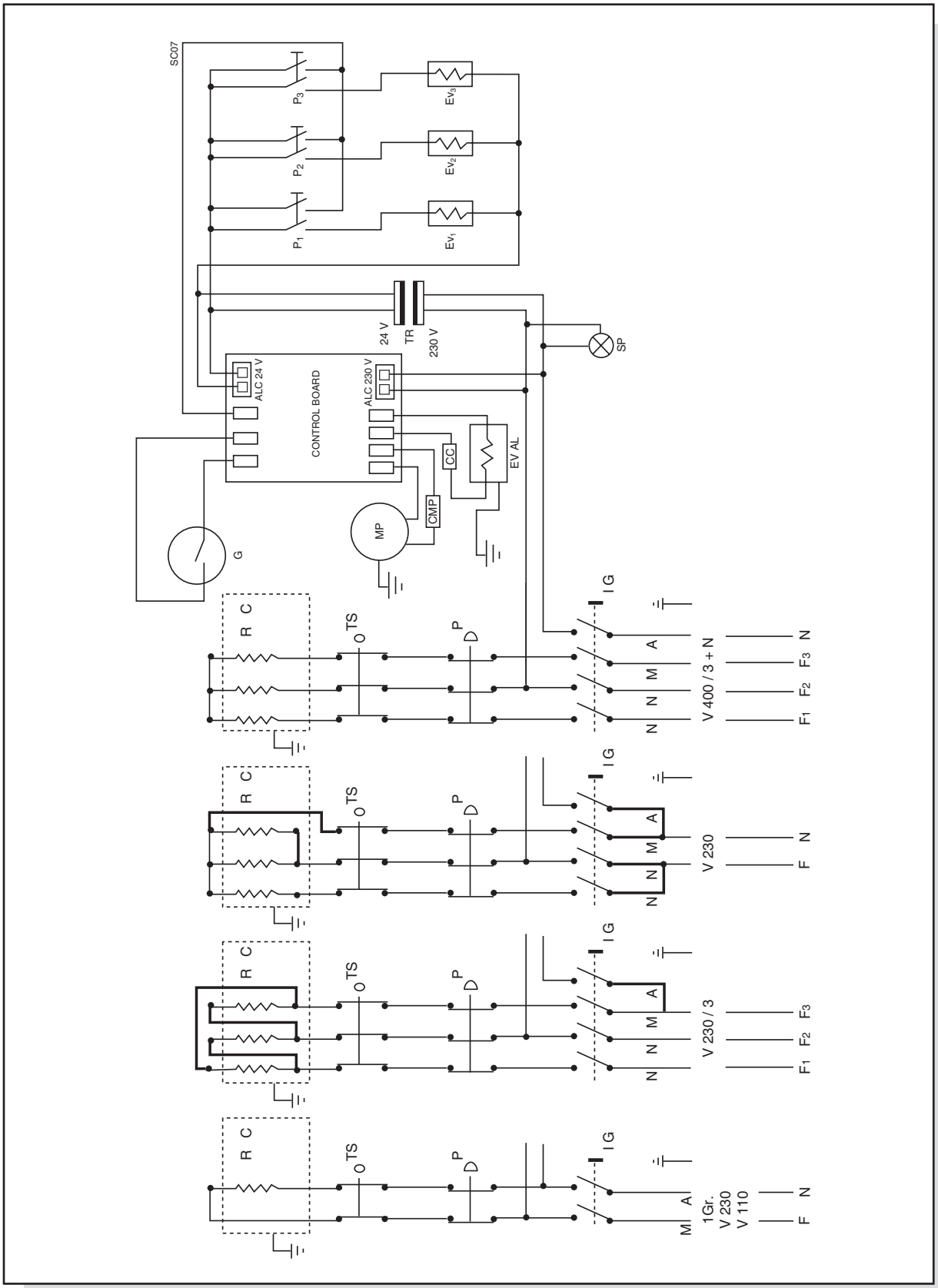

⚠ **TRANSFORMATION FROM 400/3+N TO 230 SINGLE PHASE POSSIBLE ONLY ON MODELS WITH 2-3 GROUPS**

NEW EK

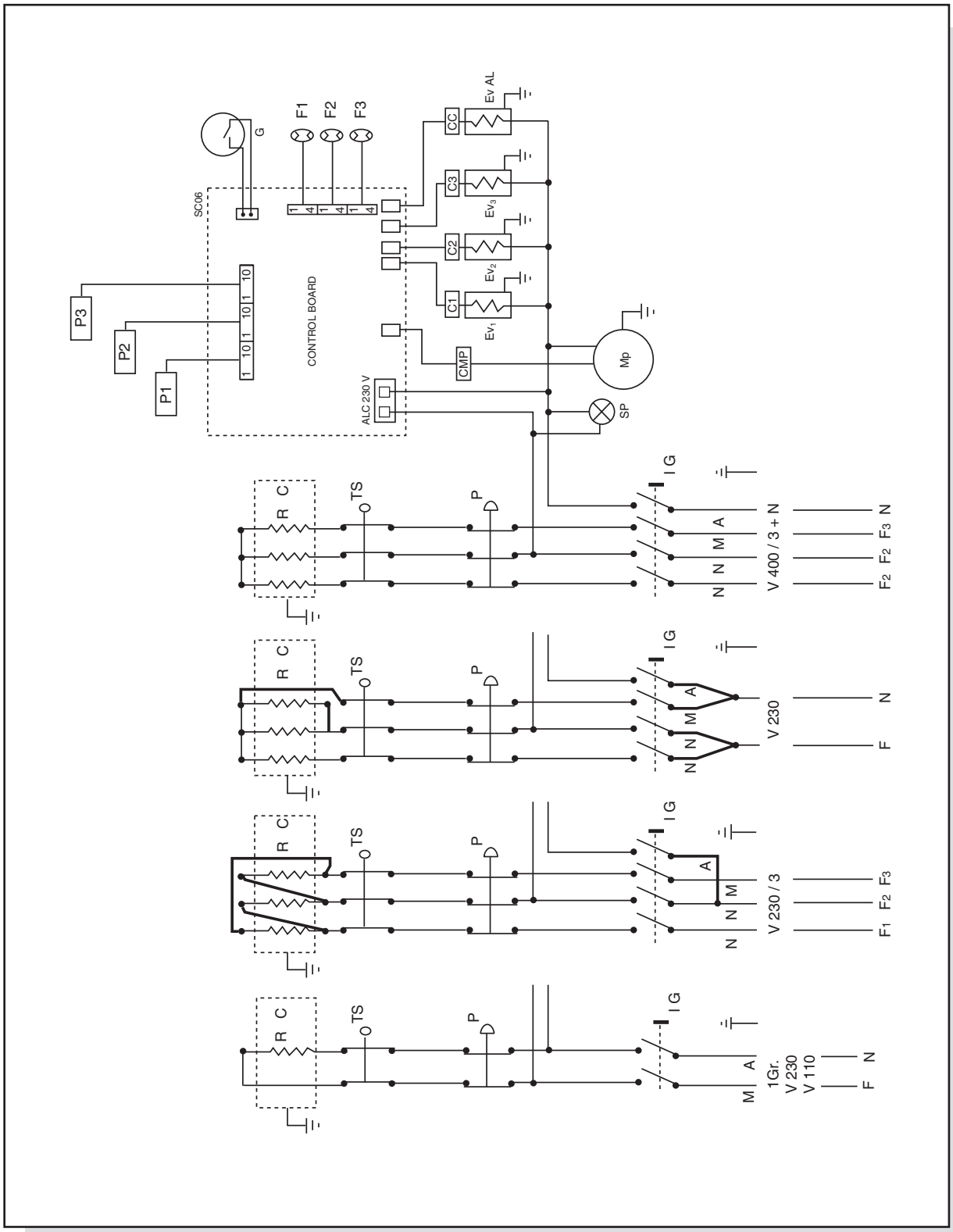

TRANSFORMATION FROM 400/3+N TO 230 SINGLE PHASE POSSIBLE ONLY ON MODELS WITH 2-3 GROUPS

SPECIAL EK - EP

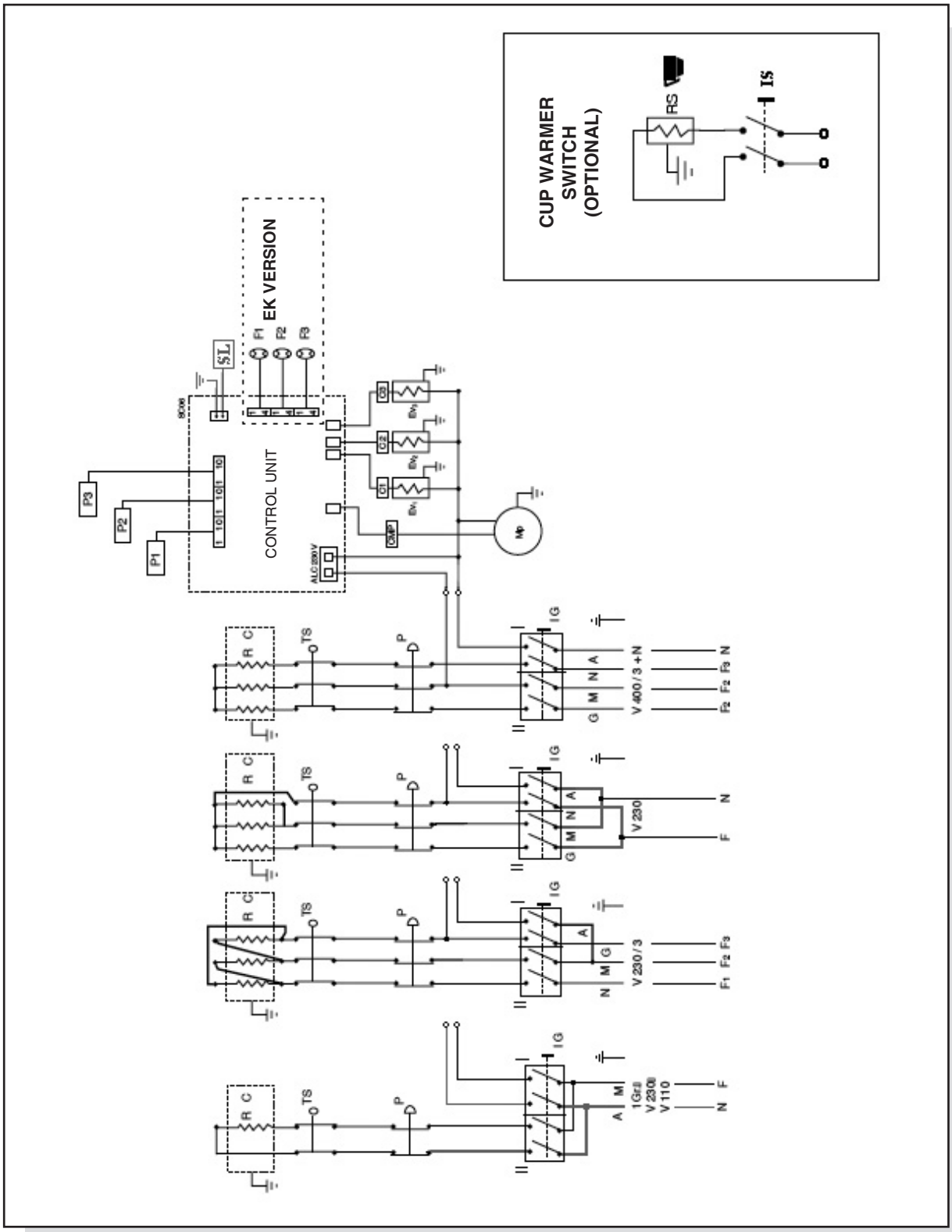

⚠ **TRANSFORMATION FROM 400/3+N TO 230 SINGLE PHASE POSSIBLE ONLY ON MODELS WITH 2-3 GROUPS**

KEY TO WIRING DIAGRAM

- **ALC** Control board power supply
- **MP** Motor pump
- **RS** Cup warmer heating element
- **RC** Boiler heating element
- **EVAL** Solenoid valve, automatic water refill
- **EV1** Solenoid valve, 1st group from the right
- **EV2** Solenoid valve, 2nd group from the right
- **EV3** Solenoid valve, 3rd group from the right
- **EV4** Solenoid valve, 4th group from the right
- **P1** Touchpad, 1st group from the right
- **P2** Touchpad, 2nd group from the right
- **P3** Touchpad, 3rd group from the right
- **P4** Touchpad, 4th group from the right
- **SL** or **G** Control for water level in the boiler
- **F1** Flow meter for 1st group from the right
- **F2** Flow meter for 2nd group from the right
- **F3** Flow meter for 3rd group from the right
- **F4** Flow meter for 4th group from the right
- **IG** Main switch
- **TS** Safety thermostat with manual reset
- **TR** Transformer for solenoid valve
- **CMP** Control board relay controlling the motor-driven pump.
- **C1** Control board relay controlling the solenoid valve 1st group from the right
- **C2** Control board relay controlling the solenoid valve 2nd group from the right
- **C3** Control board relay controlling the solenoid valve 3rd group from the right
- **C4** Control board relay controlling the solenoid valve 4th group from the right
- **CC** Control board relay to control the automatic water level solenoid valve
- **P** Heating element pressure switch
- **FC** Delivery group microswitches
- **SP** Electric connection control light
- **IS** Cup warmer switch

3.5 COMPONENTS

1 GROUP

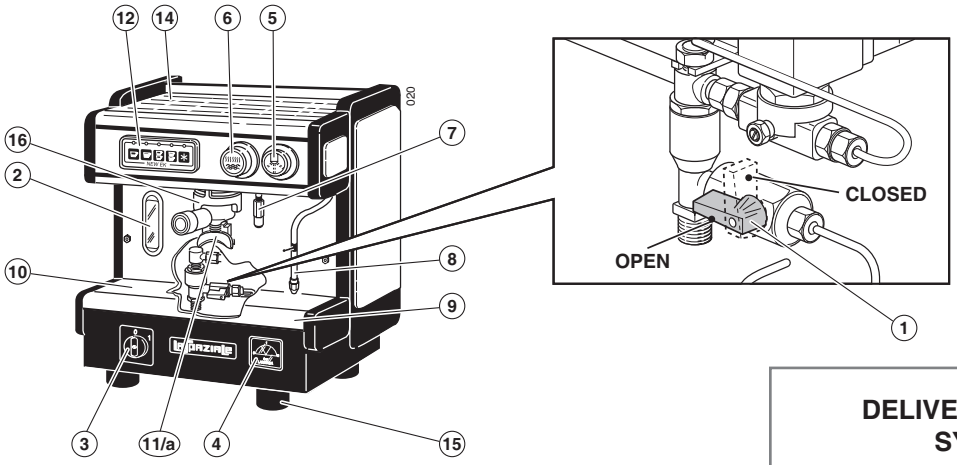

RAPID - SPAZIO

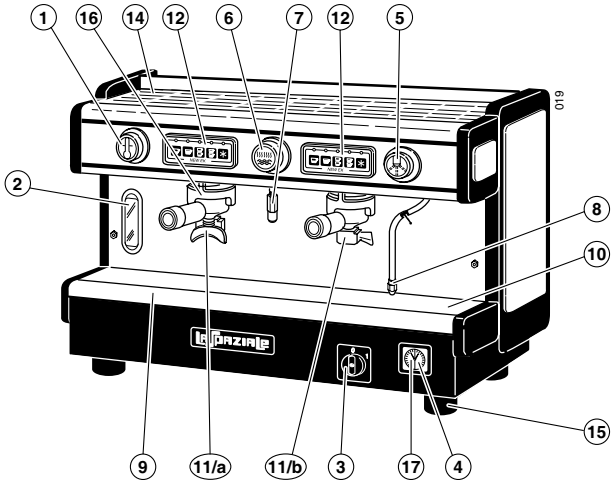

NEW

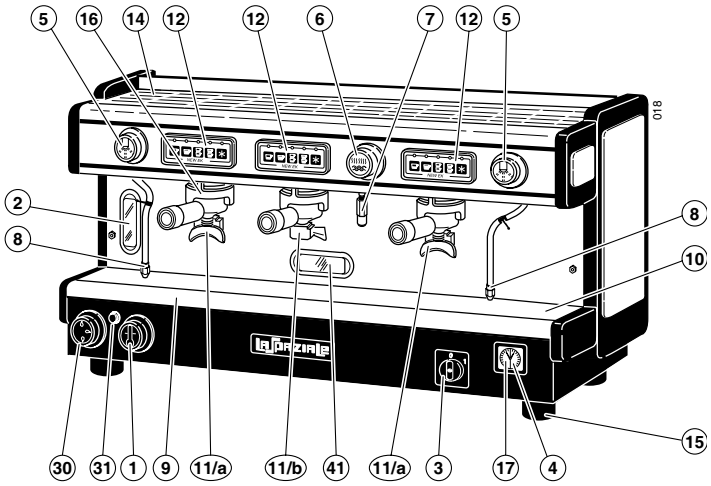

DELIVERY CONTROL SYSTEMS

MOD. EK

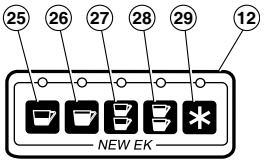

MOD. EC

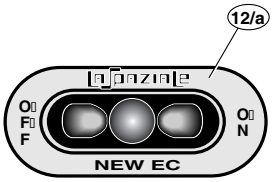

MOD. 3000

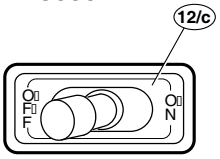

MOD. EP

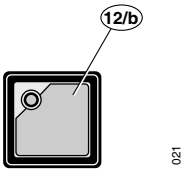

KEY TO PARTS

- **1** Tap for manual boiler filling
- **2** Boiler water level gauge
- **3** Main switch
- **4** Boiler pressure gauge
- **5** Steam delivery knob
- **6** Hot water delivery knob
- **7** Hot water pipe
- **8** Steam wand
- **9** Water drip tray
- **10** Drip tray grid
- **11a** 2-cup filter holder
- **11b** 1-cup filter holder
- **12** Group delivery control with automatic and manual doses
- **12a** Group delivery control Mod. EC
- **12b** Group delivery control Mod. EP - Super Elettrik
- **12c** Group delivery control - New 3000 - Super Ultra
- **14** Top cup grid
- **15** Adjustable feet for the appliance
- **16** Coffee delivery group
- **17** Motor pump pressure gauge
- **25** 1 short coffee button
- **26** 1 long coffee button
- **27** 2 short coffee button
- **28** 2 long coffee button
- **29** Free flow coffee delivery button
- **30** Control knob for gas delivery (optional)
- **31** Piezoelectric lighter for gas (optional)
- **41** Opening for gas burner inspection

3.6 COMPONENTS (SPECIAL)

1 GROUP

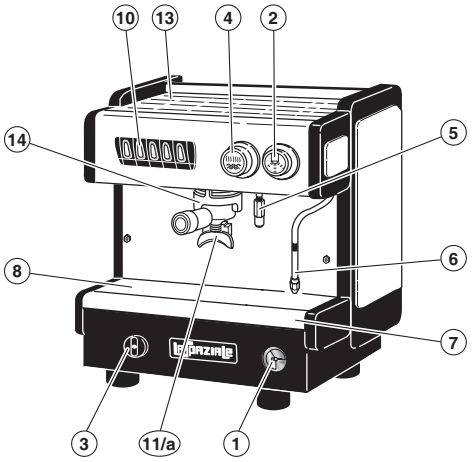

2 GROUPS SPAZIO

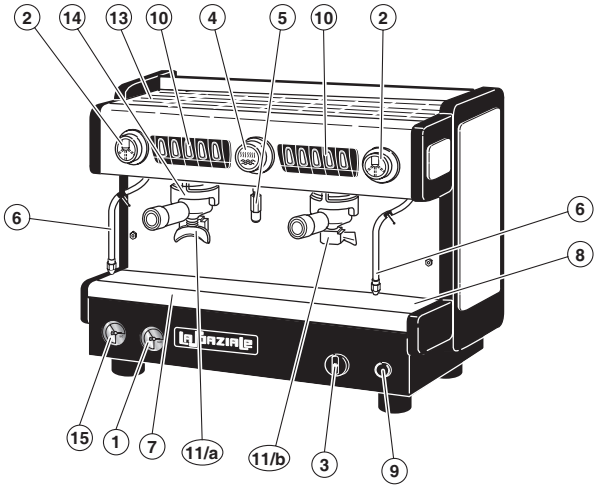

2 GROUPS

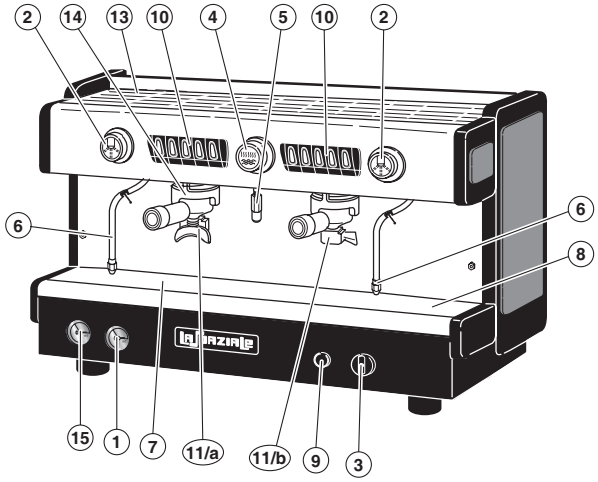

DELIVERY CONTROL SYSTEMS

MOD. EK

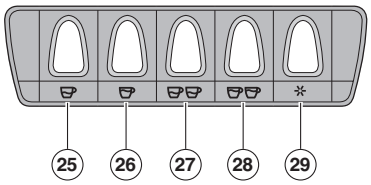

MOD. EP

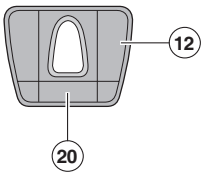

2 GROUPS GAS

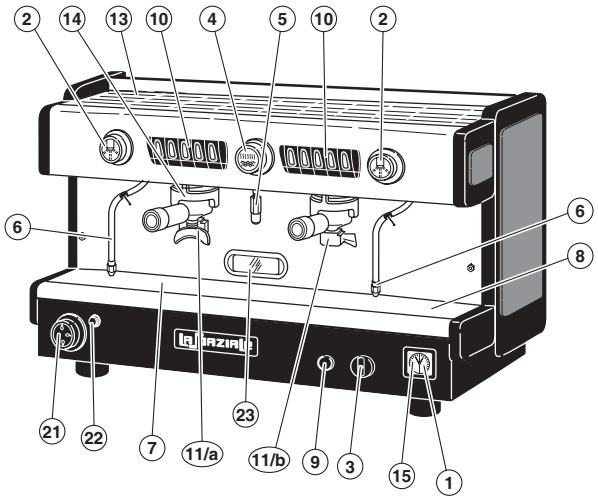

3 GROUPS

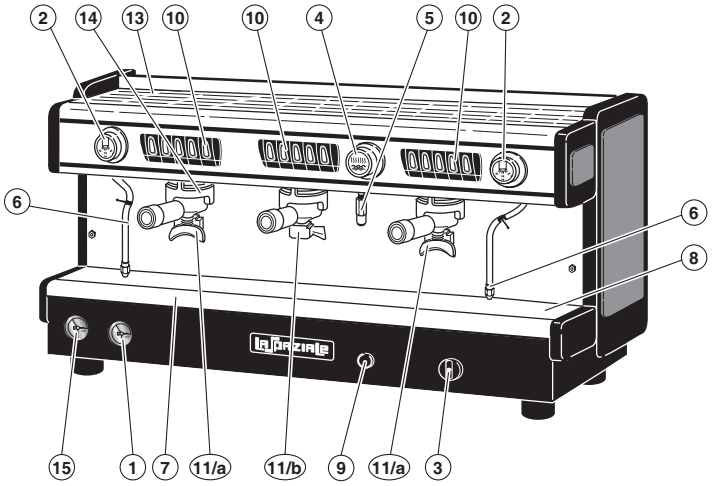

KEY TO PARTS

- **1** Boiler pressure gauge
- **2** Steam delivery knob
- **3** Main switch
- **4** Hot water dispensing knob
- **5** Hot water nozzle
- **6** Steam wand
- **7** Water drip tray
- **8** Drip tray grid
- **9** Electric cup warmer button
- **10** Group delivery control with automatic doses EK
- **11a** 1-cup filter holder
- **11b** 2-cup filter holder
- **12** Group delivery control with semiautomatic doses EP
- **13** Top cup grid
- **14** Coffee delivery group
- **15** Motor-driven pump pressure gauge
- **21** Control knob for gas delivery (optional)
- **22** Piezoelectric gas igniter(optional)
- **23** Burner inspection opening
- **25** 1 short coffee preset delivery button
- **26** 1 long coffee preset delivery button
- **29** 2 short coffees preset delivery button
- **28** 2 long coffees preset delivery button
- **29** Manual delivery button

4 S3 RANGE

☞ **Carry out the procedures which follow referring to the chapter "Parts" on page 68.**

4.1 EP MODEL

☞ **This appliance has an electronic control-board that controls the water level in the boiler, the activation of the motor pump and the activation of the cup warmer heating element (optional).**

OPERATING TEMPERATURE ADJUSTMENT FOR THE ELECTRIC HEATING SYSTEM

The electric heating system of the appliance is already set by the manufacturer to operate at a temperature of **120 °C** in the boiler, corresponding to **1 bar** boiler pressure. Boiler pressure is viewed on the pressure gauge (4) situated on the base of the appliance.

In order to increase or decrease the boiler pressure, it is necessary to operate on the electric pressure switch (Pict 14) which is inside the machine (on the right side), as indicated here below:

- Turn the adjustment screw anti-clockwise to increase boiler pressure.
- Turn the adjustment screw clockwise to decrease it.

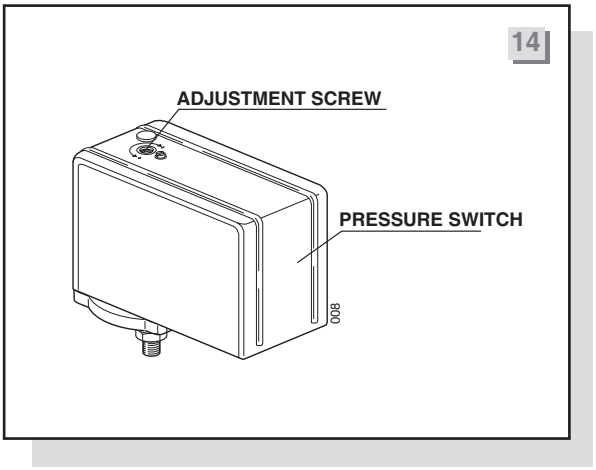

⚠ **WARNING!**
Cut off power while operating on the pressure switch.

Boiler pressure (at operating temperature) is normally modified exclusively in order to adapt the machine temperature to the particular type of coffee blend so as to obtain the best result in the cup.

POURING HOT WATER TO PREPARE INFUSIONS

Hot water delivery for infusions is semiautomatic:
to start or stop delivery, press the hot water delivery button (6).

☞ **NOTE. Hot water delivery for infusions has a 1-minute time-out, after which it stops automatically.**

ELECTRIC CUP WARMER (optional)

Press the cup warmer operating button (24) and check its operating status through the lighting up of the LED (23) on the control panel. To switch it off, press the same button.

4.2 EK MODEL

☞ **This appliance is equipped with an electronic control board which controls the water level in the boiler, the doses of each delivery group (since the appliance has a water dosing system based on flow meters), the activation of the cup warmer heating element (optional), and the hot water timed delivery for infusions (with possible temperature mixing settings), and it also shows any possible malfunctions through the LEDs on the control panel.**

OPERATING TEMPERATURE ADJUSTMENT FOR THE ELECTRIC HEATING SYSTEM

The electric heating system of the appliance is already set by the manufacturer to operate at a temperature of **120 °C** in the boiler, corresponding to **1 bar** boiler pressure. Boiler pressure is viewed on the pressure gauge (4) situated on the base of the appliance.

In order to increase or decrease the boiler pressure, it is necessary to operate on the electric pressure switch (Pict 15) which is inside the machine (on the right side), as indicated here below:

- Turn the adjustment screw anti-clockwise to increase boiler pressure.
- Turn the adjustment screw clockwise to decrease it.

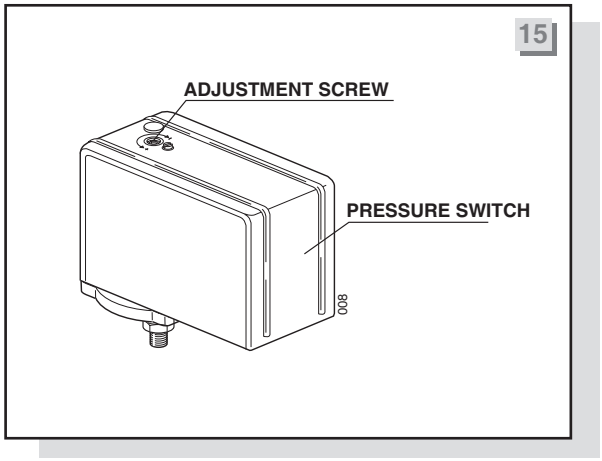

⚠

WARNING!
Cut off power while operating on the pressure switch.

Boiler pressure (at operating temperature) is normally modified exclusively in order to adapt the machine temperature to the particular type of coffee blend so as to obtain the best result in the cup.

GROUP DOSE SETTING

1° Hold down the button ON/OFF of the first touchpad on the right (1st GROUP) for about **10 seconds** until all LEDs on the touchpad light up (21 -20-19-18).

2° Within **60 seconds** fasten a filter holder (11 b) containing a dose of ground coffee to the group; put a cup below the filter holder and press the button “1 short coffee” (25) on the corresponding touchpad. The LED for the selected dose (21) will switch off to indicate that the dose is being set.

3° When the coffee reaches the required dose, press the button “1 short coffee” (25) again to stop the coffee delivery and confirm the required dose.

4° Repeat the same procedure for the other buttons (26-27-28) always referring to the first touchpad.

☞ **NOTE. Follow the above procedure to set all remaining doses, using the 1-cup coffee holder (11 b) or the 2-cup holder (11 a) according to the dose to be set.**

☞ **WARNING!**
By setting the doses on the first touchpad on the right, automatically the other groups will be acquiring the same doses; if you want to set a group with different doses, repeat the same dose setting procedure on the touchpad corresponding to the group you want to program differently.

HOT WATER DOSE AND TEMPERATURE MIX SETTINGS FOR INFUSIONS

1° Hold down the button ON/OFF of the first touchpad on the right (1st GROUP) for about **10 seconds** until the LEDs of the control panel switch on (21-20-19-18).

2° Press the cup warmer button (24) and check that the LED indicating cup warmer status (23) and the LED of the 1st group (21) have switched on indicating the process of entering the hot water dose programming phase. At this stage, the water temperature mix option is deactivated.

3° Press the cup warmer button (24) again to activate the temperature mix setting; the 4th LED from the right will switch on to indicate this mode.

In summary:
Led 1st group on (21) = no mixed water
Led 4th group on (18) = 50% hot water and 50% cold water.

☞ **NOTE. Use this option if the user does not want water for infusions to be too hot.**

Proceed to the hot water dose programming phase as follows:

- Place a pitcher below the hot water nozzle (7), so as to avoid any possible burns.
- Press the hot water button (6) to start hot water delivery.
- Once the required dose has been delivered, press the button (6) again to stop the delivery.

☞ **NOTE. Once you have entered the programming phase, it is necessary to hold down the button ON/OFF for at least 5 seconds to quit, or to wait 60 seconds to quit automatically.**

ELECTRIC CUP WARMER (optional)

Press the cup warmer operating button (24) and check its operating status through the lighting up of the LED (23) on the control panel. To switch it off, press the same button.

BOILER WASH CYCLE

It is possible to change the water in the boiler automatically.

For the operations to be performed, please refer to the "USE AND MAINTENANCE MANUAL" for the appliance.

☞ **NOTE.**
The water level control in the boiler can be carried out using a conduction probe (S) or a magnetic reed (floater) (R).
On the control-board, it is possible to select the kind of control according to the system used arranging for the connections R-0-S (see the chapter "Diagrams for electronic board connection" on page 62).

R 0 S Water level control by magnetic reed (floater)

R 0 S Water level control by conduction probe

4.3 ALARM CONTROL – EK MODEL

Damaged water refill system (21-19 on and 20-18 flashing)
This alarm is a blocking one and is viewed when the automatic refill for the boiler has been in operation for more than **4 minutes**. To restore the standard operating phase, switch the appliance off for a while using the main switch (3): if the problem is still there, check the automatic water refill system of the boiler.

Damaged flow meter (the LED corresponding to a group that is on delivery mode, is flashing) after 5 seconds
This alarm can be viewed when, while during coffee delivery, there is a failure in the flow meter operation of the group that is on delivery mode, or if the grinding degree is too fine.

Damaged transformer (20-18 on and 21-19 flashing)
This alarm is a blocking one and is viewed when there is no power (24V) to the transformer secondary feeding the solenoid valves of the groups and the automatic refill system of the boiler.

Stop on P5 (LED corresponding to the group on delivery mode)
This alarm is viewed when delivery performed using the manual delivery button ON/OFF has been in operation for more than **4 minutes**.
To cancel the alarm, press the button ON/OFF again.

Loss of data (21-18 on and 20-19 flashing)
This alarm is viewed when the data preset by the operator are lost and default data are restored. To cancel the alarm press the cup warmer button (24). If the problem persists, replace the control board.

4.4 SELETRON MODEL

This appliance has an electronic control board which controls water level in the boiler, the activation of the motor pump, the activation of the cup warmer heating element and the doses of the delivery groups, (since the appliance has a water dosing system based on flow meters). It also controls the heat regulation of the boiler temperature and possible malfunctions to be viewed on the display.

STARTING UP AND ADJUSTING THE APPLIANCE

To start up the appliance, please refer to the "USE AND MAINTENANCE MANUAL" that provided with it.

CONTROL PANEL GENERAL DESCRIPTION

CONTROL PANEL 16

DISPLAY

▼ = DISPLAY MENU DECREASE

▲ = DISPLAY MENU INCREASE

OK = DATA CONFIRM BUTTON

P = SETTING BUTTON

= ELECTRIC CUP WARMER ON/OFF

DISPLAY READINGS DURING NORMAL OPERATION

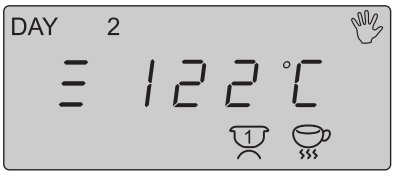

During normal operations, the display gives the following information:

Indication of the appliance switching on/off status:

: switching on/off using the main switch (3)

: switching on/off controlled by timer

This indicates that the electric cup warmer is switched on

This indicates the boiler temperature, expressed in °C
(**NOTE.** The datum **100** will flash until **100 °C** is reached, after which, the temperature value will progressively increase until it reaches the value preset in the T menu).
The symbol °C indicates the status of the heating elements:
• flashing if the heating elements are on
• fixed if the heating elements are off

This indicates that the 2°C increase mode for the normal operating temperature set in the T menu has been activated

To enable this function, press and hold down the button ▲ for about **3 seconds**; to deactivate it, press and hold down the button ▼.

This indicates the day of the week
(1 =Monday 2=Tuesday 3=Wednesday, etc.)

This indicates that the corresponding group is delivering coffee

Basic setting (date - day - time)
To enter the menu for setting the date, day of the week, and time, proceed as follows:

1. Press and hold down the buttons ▼ and ▲ for **5 seconds**, until the display reads **"A XXXX"**, where the symbol is flashing and the symbols **"XXXX"** refer to the preset year **(NOTE. When the two buttons are pressed, the current time of day is viewed).**

2. Change the settings, if necessary, using the buttons ▼ and ▲ and press the Button OK to confirm..

3. The display indicates **"b XX"**, where **"XX"** indicates the preset month. Change the setting, if necessary, using the buttons ▼ and ▲ and press the Button OK to confirm.

4. The display indicates **"c XX"**, where **"XX"** indicates the preset day. Change the setting, if necessary, using the buttons ▼ and ▲ and press the Button OK to confirm.

5. The display indicates **"DAY X"**, where **"X"** indicates the number of the preset day (1= Monday 2=Tuesday etc.). Change the setting, if necessary, using the buttons ▼ and ▲ and press the Button OK to confirm.

6. The display indicates **"d XX:YY"**, where **"XX"** indicates the hours and **"YY"** the minutes. If necessary, first change the flashing **"XX"** value using the buttons ▼ and ▲ , and press the button OK to confirm; then change flashing **"YY"** value using the buttons ▼ and ▲ , and press the button OK to confirm.
The display will automatically return to default viewing status.

DELIVERY COUNTERS CONTROL

To enter the setting menu for the coffee and hot water delivery counters, proceed as follows:

1. Press and hold down the button OK for about 4 seconds until the display indicates:

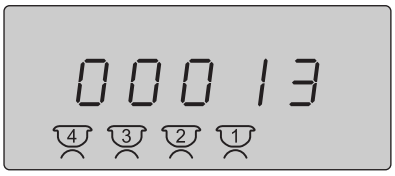

Where the symbols 4 3 2 1 are flashing to indicate the partial counts for the coffee doses delivered by the appliance (any delivery made with the free flow button is not counted ON/OFF).

2. To reset the datum relating to partial counters (starting from zero again) press and hold down the button OK for about **2 seconds** until the display shows "**Reset**".

3. Press the button OK to reset the datum.

At this stage, pressing the button the display shows:

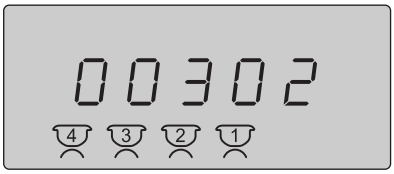

Where the symbols 4 3 2 1 are fixed to indicate the total count of coffee deliveries made by the appliance (any delivery made with the free flow button is not counted ON/OFF).

☞ **NOTE. Total counters cannot be set to zero.**

Press the button the display will show:

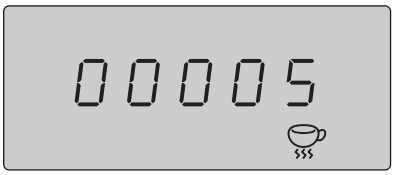

Where the flashing symbol indicates the partial counter for hot water delivery made by the appliance.

4. To reset the datum relating to partial counters (starting from zero again) press and hold down the button OK for about **2 seconds** until the display shows "**Reset**".

5. Press the button OK to reset the datum to zero.

At this stage, pressing the button the display shows:

Where the symbol is fixed to indicate the total count for hot water deliveries made by the appliance.

☞ **Total counters cannot be set to zero.**

NOTE. If the appliance is controlled by timer, the partial counters are automatically reset every time you switch on the appliance by timer again.
If the deliveries count should exceed 99999 the display will show, for example:

Where the number "**1**" indicates hundreds of thousands (read 100943).

6. Press the button to quit the Counter menu.

APPLIANCE SETTINGS

The appliance is provided with preset data (default data).
These data are:

- BOILER TEMPERATURE: 120 °C
- THERMIC DIFFERENTIAL (ΔT): 1 °C
- COFFEE DOSES: 1st DOSE = 90 PULSES 2nd DOSE = 100 PULSES
  3rd DOSE =145 PULSES 4th DOSE = 160 PULSES
- BUILT-IN PUMP PRESSURE (when present): 9 BAR
- FREE FLOW DELIVERY GROUPS ENABLED
- TIMER FUNCTION NOT ENABLED
- CONTROL ON COFFEE DELIVERY TIME NOT ENABLED
- TYPE OF BOILER LEVEL CONTROL: CONDUCTION PROBE

MENU PROGRAM OF THE APPLIANCE

This appliance is run by a program made of 7 main menus:

- **TIMER MENU (Symbol flashing):** this menu is used to set the switching on and off time of the appliance for each day of the week.
- **TEMPERATURE MENU (Symbol "t" flashing):** this menu is used to change the data for the heating system (boiler temperature and "**dt**").
- **COFFEE DOSES SETTING MENU (Symbols flashing):** this menu is used to set the coffee delivery doses.
- **SETTING MENU FOR HOT WATER DELIVERY DOSE (Symbol "th" flashing):** this menu is used to set the time for hot water delivery for infusions.
- **SETTING MENU FOR COFFEE DELIVERY TIME CONTROL (Symbol flashing):** this menu is used to set control over coffee delivery times.

- **SETTING MENU FOR "ON/OFF" BUTTON (Word "OFF:On" flashing):** this menu is used to activate or deactivate the "ON/OFF" free flow button for all delivery groups.

- **TEMPERATURE MIX SETTING MENU FOR HOT WATER FOR INFUSIONS (Word "MIX" flashing):** this menu is used to enable the temperature mix mode for hot water delivery for infusions.

NOTE. While scrolling through these menus, 60 seconds after any button has been pressed, the display will return to standard operation mode (Pict 16 – page 42). To quit the programming phase before the 60 seconds have passed, press and hold down the button P for about 5 seconds; the data set previously will be stored to memory.

- **TIMER MENU**

1. Press the button P **and hold it down for about 5 seconds; the display will show the flashing symbols** and "**P**".

2. Press the button OK to open the **TIMER** menu, the display will show:

Where "**OFF**" is shown by default.

1. If you confirm "**OFF**", using the button OK, this quits the **TIMER** menu and the display goes back to showing the blinking symbols and "**P**".
   If, by pressing the button you select "**ON**", the symbol disappears and if you confirm it with the OK, button, you will open the menu for the weekly switching "ON" and "OFF" time of the appliance. The display will read:

where the numbers indicating switching on time for Monday "**DAY 1**" are flashing.

2. Use the buttons ▼ and ▲ to set the hour for the appliance to switch on and then press the button OK to confirm.

3. The digits corresponding to the minutes will start to flash.

4. Use the buttons ▼ and ▲ to set the minutes of the hour for the appliance to switch on and then press the OK button to confirm.

5. Use the buttons ▼ and ▲ to set the hour for the appliance to switch off and then press the button OK to confirm.

6. Lastly, use the buttons ▼ and ▲ to set the minutes of the hour for the appliance to switch on and then press the button OK to confirm.

7. The number corresponding to the day of the week automatically increases; therefore, repeat the procedures indicated here from point **2** to point **6** to set the switching on and off time of the appliance for the remaining days.

At the end of the weekly **TIMER** programming phases, as soon as the switching off time has been confirmed for day no. 7, the display will show the flashing symbols ⏲ and **"P"**.

☞ **NOTE. When you confirm the minutes relating to the switching on of the appliance, the system automatically suggests as switching off time the same preset hour for the switching on (as the switching on time cannot be before the switching off time).**

In order to set the TIMER so as not to have the switching on in a particular day of the week (for example, the day on which the premises are closed) set 00:00 for the switching ON time and 00:00 as the switching OFF time.

During the switching off time of the appliance as controlled by **TIMER** the display reads:

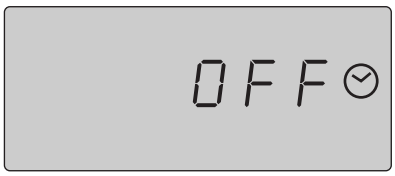

☞ **NOTE. If the appliance has been switched off by TIMER, to force it to switch it on, press and hold down the button OK for about 2 seconds; this will switch on the appliance. The TIMER function is deactivated (the appliance must be switched on and off manually). To restore TIMER operation, follow the instructions on page 47 (TIMER Menu).**

- **TEMPERATURE MENU**

1. Press and hold down the button P for about **5 seconds**; the symbols and "**P**" will flash.
2. Press the button the display will show a flashing "**t**" symbol.
3. Press the button OK to have access to the operating temperature values; the display will show:

1. Use the buttons and to change the operating temperature of the appliance, until it reaches the right value.
2. Press the button OK to confirm it and the display will automatically show:

1. The buttons and can be used to change the value of the thermic differential ΔT (the difference between the activation and deactivation of the heating elements in the boiler), expressed in **°C** .
2. Press the button OK to confirm the setting.

At the end of the **TEMPERATURE PROGRAMMING PHASE**, as soon as the "**dt**" value has been confirmed, the display will show the flashing symbol "**t**".

☞ **NOTE. The temperature of the boiler (operating temperature) is usually modified exclusively in order to adapt the machine temperature to the type of coffee blend used, so as to improve the result in the cup.**

- **COFFEE DOSES SETTING MENU**

1. Press and hold down the button P for about **5 seconds**; the symbols and "**P**" will flash.
2. Press the button the display will show the flashing symbol "**t**".

3. Press the button ▼ again and the display will show the flashing symbols 4 3 2 1 .

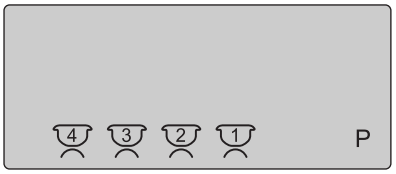

4. Press the button OK, the display will show:

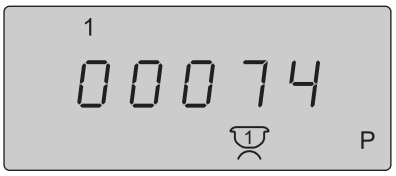

Where **"1"** identifies the dose selection (short coffee);

"00074" identifies the current number of pulses for the 1 short coffee dose; 1 identifies the delivery group to be programmed.

5. Within **60 seconds** fasten a filter holder (11 b) containing a dose of ground coffee to the group; put a cup below the filter holder and press the button "1 short coffee" (25) on the corresponding touchpad.
6. When the coffee reaches the required dose, press the button "1 short coffee" (25) again to stop the coffee delivery and confirm the required amount in the cup (the display will show the preset number of pulses confirmed).
7. Repeat the same procedures for the other buttons (26-27-28) always on the touchpad on the right; to pass from the first selection (1 short coffee) to the others, press the button ON/OFF.

☞ **NOTE: Follow the same steps to program the remaining doses using the 1-cup filter (11b) or the 2-cup holder (11a) according to the dose to be programmed.**

⚠ **WARNING!**
By programming the doses for the touchpad on the right, the other delivery groups automatically acquire the same doses.

If you want to set a delivery group with different doses, you have to repeat the above mentioned procedure on the touchpad you want to set, choosing the desired touchpad and moving with the buttons ▼ and ▲ (the symbol 1 indicates the group being set).

At the end of the **COFFEE DOSES** setting phase, as soon as the last datum is confirmed with the button OK, the display will show the flashing symbols 4 3 2 1.

- **SETTING MENU FOR HOT WATER DELIVERY DOSE**

1. Press and hold down the button P for about **5 seconds**, the symbols and "**P**" will flash.
2. Press the button the display will show the symbol "**t**" flashing.
3. Press the button again, the display will show the 4 3 2 1 flashing.
4. Press the button the display will show the symbol "**th**" flashing.

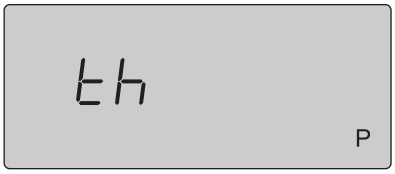

Press the button OK, the display will show:

where the value "**004**" corresponds to the preset time in seconds for the hot water dose.

Proceed with the setting of the hot water dose, as follows:

1. Place a pitcher below the hot water nozzle (7) in order to avoid any possible burns.
2. Press the hot water button (6) to start hot water delivery.
3. Once the desired dose has been reached, press the same button again (6) to stop the delivery (the display will show the preset time in seconds, even if the program is storing the datum in tenths of seconds).
4. Press the button OK to confirm the setting.

At the end of the **HOT WATER DELIVERY DOSE** setting phase, as soon as the last setting has been confirmed with the button OK, the display will show the flashing symbol "**th**".

- **COFFEE DELIVERY TIME CONTROL MENU**

This option is used to control the coffee delivery speed and then display the relevant (AL 05 coarse grinding - AL 06 fine grinding) at the end of any coffee delivery considered as anomalous.

1. Press and hold down the button P for about **5 seconds**, the symbols and "**P**" will flash
2. Press the button the display will show the symbol "**t**" flashing.
3. Press the button again, the display will show the symbols 4 3 2 1 flashing.
4. Press the button the display will show the symbol "**th**" flashing.
5. Press the button the display will show the symbol flashing.

1. Press the button OK, the display will show:

If you confirm "**OFF**" (flashing) this function will stay deactivated and you can return to the main grinding menu.

If you press the button to select "**ON**" (flashing) and confirm the setting by pressing the button OK the display will show:

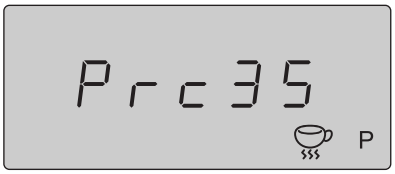

Where "**Prc35**" refers to the preset percentage.

This option makes it possible to set a range of values, for which the coffee delivery is considered correct. The values are given in % and they refer to a recorded delivery time set during doses setting in the relevant menu.

2. Use the buttons ▼ and ▲ to change the percentage value.

☞ **NOTE. Setting a lower % value means stricter control over coffee delivery time according to the preset time, whereas if a higher % value is set, there is a softer control over the coffee delivery time.**

Setting range: **10-35%**.

At the end of the programming phase for **delivery TIME CONTROL**, as soon as the last setting has been confirmed with the button OK, the display will show the flashing symbol .

- **ON/OFF BUTTON SETTING MENU**

1. Press and hold down the button P for about **5 seconds**; the symbols and "**P**" will flash.

2. Press the button ▼; the display will show the symbol "**t**" flashing.

3. Press the button ▼ again; the display will show the symbols 4 3 2 1 flashing.

4. Press the button ▼; the display will show the symbol "**th**" flashing.

5. Press the button ▼; the display will show the symbols flashing.

6. Press the button ▼ again; the display will show the words "**OFF:On**" flashing.

1. Press the button OK; the display will read:

If "**ON**" (flashing) is used to confirm, the manual free flow button ON/OFF is activated (coffee delivered with this selection cannot be counted in the delivered coffee counter menu). If this button ▲ is used to select "**OFF**" (flashing) and the datum is confirmed with manual delivery OK, it is deactivated.

Once the required option has been selected, the program returns to the main menu; the display will show the flashing message “**OFF:On**”.

- **TEMPERATURE MIXTURE SETTING MENU FOR HOT WATER FOR INFUSIONS**

1. Press and hold down the button P for about **5 seconds**, the and “**P**” will flash.
2. Press the button , the display will show the flashing symbol “**t**”.
3. Press the button again, the display will show the flashing symbols 4 3 2 1.
4. Press the button the display will show the flashing symbol “**th**”.
5. Press the button the display will show the flashing symbol .
6. Press the button the display will show the words “**OFF:On**” flashing.
7. Press the button the display will show the word “**MIX**” flashing.

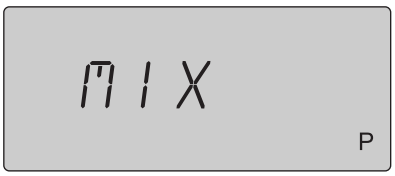

1. Press the button OK, the display will show:

If you confirm the flashing “**OFF**” the temperature mix will not be enabled. If you press the button si to select “**ON**” (flashing) and confirm the datum with OK then mixing is enabled.

- **OFF** = no mixed water
- **ON** = 50% hot water and 50% cold water

This option is used if the user does not want the water for infusions to be too hot.

At the end of the **TEMPERATURE MIX SETTING MENU FOR HOT WATER FOR INFUSIONS**, as soon as the last datum is confirmed, the display will show the flashing word “**MIX**”.

- **SOUND BEEP SETTING MENU (version 8 software).**

1. Press and hold down the button P for about **5 seconds**, the symbols and "**P**" will flash.
2. Press the button the display will show the flashing symbol "**t**".
3. Press the button again, the display will show the flashing symbols 4 3 2 1 .
4. Press the button he display will show the flashing symbol "**th**".
5. Press the button the display will show the flashing symbol .
6. Press the button the display will show the flashing words "**OFF:On**".
7. Press the button the display will show the flashing word "**MIX**".
8. Press the button the display will show the flashing word "**BEEP**".

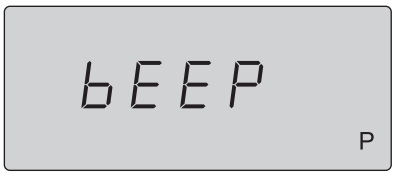

1. Press the button OK, the display will show:

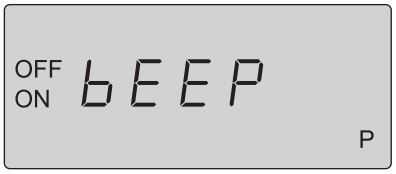

If you press the button to select "**ON**" (flashing) the sound beep will remain enabled. If you press the button to select **"OFF"** (flashing) and confirm the setting with OK the sound beep will be deactivated.

ELECTRIC CUP WARMER

For better pre-heated cups, it is possible to use the additional electric cup warmer, pressing the button and checking the operating status through the lighting up of the corresponding symbol on the display (33). Press the same button to switch it off.

BOILER WASH CYCLE

It is possible to change the water in the boiler automatically.

For the operations to be carried out, please refer to the "**USE AND MAINTENANCE MANUAL**" provided with the appliance.

TECHNICAL SERVICE MENU

Opening this menu, it is possible to make some checks concerning the various appliance components, as well as checking the software version and to have the possibility to select the automatic refill level control for the boiler.

To open the menu, proceed as follows:

- With the main switch (3) in the OFF position (appliance switched off), press and hold down the button P.
- Have access to the appliance by moving the main switch (3) to ON (appliance switched on), the display will show:

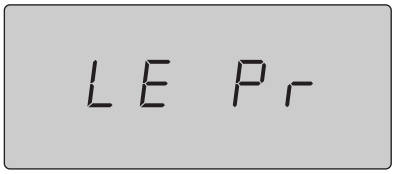

Where "**Pr**" (flashing) refers to the type of control programmed for the appliance at that time (conduction probe).

☞ **NOTE The water level in the boiler can either be controlled by conduction probe (Pr) or by magnetic reed (floater) (FL).**

- To change the setting, press the button ▲ and confirm with OK.

☞ **NOTE. This operation is only performed when replacing a control board on appliances with magnetic reed level control (floater).**

After selecting the water level control mode, according to the system used on the appliance and then confirming the setting OK, you proceed to a general check of the symbols on the display. First all symbols switch on and then off, one at a time in sequence. The function is cyclical and to terminate it and to move to the next control, press OK, and the display will show:

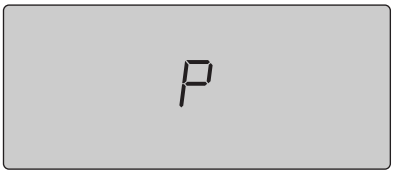

Where "**P**" stands for the generic button.

At this point it is possible to control the operation of all touchpads and control panel buttons. After "**P**", the display will show a number corresponding to the button activated at that time (if the button on a touchpad is being pressed, then the symbol for the touchpad will also be shown). If the button pressed does not work, the display will continue to show "**P**".

Pressing OK you proceed to the control of the flow meters; the display will show:

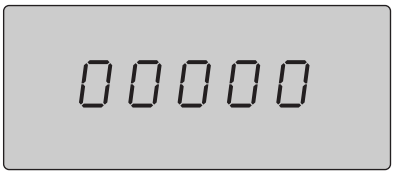

where "**00000**" is the number of pulses that will be counted.

To check the flow meters, press the button ON/OFF of the group to be tested, to start the delivery; the display will show the symbol for the group operating and the pulse count will begin. If the number of pulses is not increased or stays at zero, it is possible that there is a problem with the flow meter.
Press OK to move on to check the power on the transformer secondary.
The display will show:

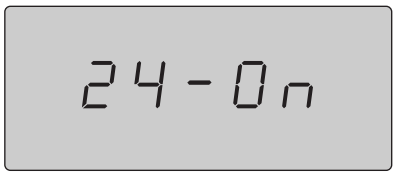

If the display reads "**On**", this means that the transformer secondary has 24 V power, while if it reads "**OF**", this means that there is no power and therefore, it is possible that there is a problem with the transformer or power supply.
Pressing OK will show the water level in the boiler; the display will show:

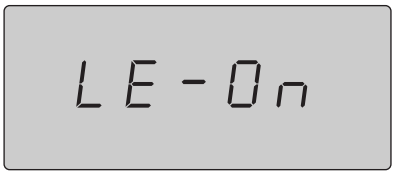

If the display reads "**On**", this means that the water level in the boiler is correct; if it reads "**OF**", this means that the water is below the set level. Pressing OK will show the temperature in the boiler; the display will show:

The temperature is shown as read at that moment by the temperature probe (in real time).
Pressing OK will show the temperature in the boiler; the display will show:

Where "**rL 1**" indicates the relay that can be enabled at this time to control operation; use the keys and to select the relay to enable and press to activate it. On the display, the word "**OF**" will become "**On**" to indicate the activated relay. To deactivate the relay, press the button again.
The following section explains the relays:

rL 1 pump motor control
rL 2 cup warmer control
rL 3 tea solenoid valve control
rL 4 automatic refill solenoid valve control
rL 5 delivery solenoid valve group no.4
rL 6 delivery solenoid valve group no.3
rL 7 delivery solenoid valve group no.2
rL 8 delivery solenoid valve group no.1
EU 1 steam solenoid valve control
SC 1 static relay control
BUZ acoustic signal control

Pressing OK you will proceed to the EEprom control; the display will read:

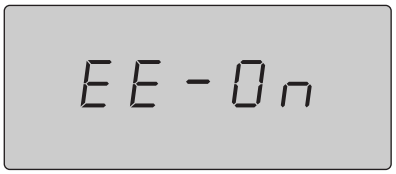

The memory (EEprom) status for that moment is shown. "**On**" means that the EEprom is operating, whereas "**OF**" means there is a failure. Pressing OK you move on to check the clock function; the display will read:

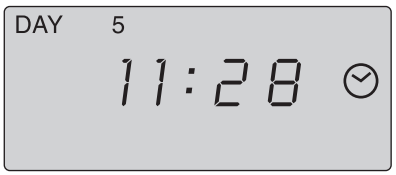

Where “**DAY 5**” is the day of the week. If the time is shown, the clock is working correctly and if this is not the case, the display will read “**ErrOr**”. Pressing OK you move on to visualize the software version; the display will show:

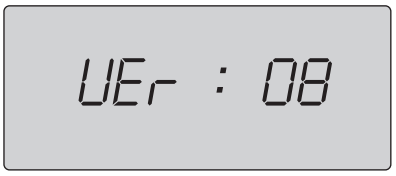

Pressing OK you move back to water level control settings. To quit this menu, switch off the appliance with the main switch (3).

4.5 ALARM CONTROL – SELETRON MODEL

☞ **NOTE. The alarm messages can be divided into two different types: blocking and non-blocking alarms.**

- The blocking ones block the appliance completely and, in order to make it work again, it is necessary to switch it off completely and to switch it on again using the main switch (3).
- The non-blocking ones do not block the appliance and it is necessary to press the button OK to cancel.

AL00 Loss of data
This alarm is not a blocking one.
It appears when the main running program of the appliance does not recognise the preset parameters at installation (temperature and dose settings) in the memory; that is to say that the appliance will continue to operate but with default settings (standard).
To cancel this alarm, it is necessary to program new TEMPERATURE and DOSE settings. If the problem persists, it is necessary to replace the control board.

AL01 High temperature
This alarm is not a blocking one.
It appears when the main running program of the appliance recognises a boiler temperature value which is higher than the preset temperature by **5 °C**. If this alarm is triggered, the static relays are temporarily disconnected; they are reactivated when the temperature returns below the programmed set value. Make sure that the appliance has the proper air circulation.

AL02 Damaged temperature probe
This alarm is a blocking one.
It appears when the main running program of the appliance recognises that the boiler temperature probe is not operating within the correct range:
- Temperature lower than **50 °C 20 minutes** after switching on (manual or by timer) or during the operating phase: disconnected probe.
- Temperature higher than **140 °C** (only during the operating phase): short circuited probe.
  Check the temperature probe connections to the control board or replace the probe.

AL03 Damaged automatic water refill system
This is a blocking alarm.
This alarm signals that the automatic water refill system of the boiler has been on for more than **4 minutes**.
To cancel this alarm switch off the appliance for a while, and switch it on again using the main switch (3).
Check the boiler refill system, should this alarm appear again.

AL04 Damaged transformer
This alarm is a blocking one.
It is viewed when the main running program of the appliance signals that the power (**24V**) to the transformer of the solenoid valves is lower than **13V**.
Check the input and output voltages of the transformer and replace it if necessary.

AL05 Coarse grinding (only if enabled in the relevant menu)
This alarm is not a blocking one.
It appears when the main running program of the appliance signals that the delivery time of a coffee dose from one of the delivery groups is shorter than the % value which was preset in the relevant menu.

AL06 **Fine grinding (only if enabled in the relevant menu)**
This alarm is not a blocking one.
It appears when the main running program of the appliance signals that the delivery time of a coffee dose from one of the delivery groups is longer than the % value which was preset in the relevant menu.

AL07 **Damaged flow meter / Fine grinding**
This is not a blocking alarm.
It appears when the main running program of the appliance signals that during the setting or the delivery of a coffee dose, (with the exception of those made using the ON/OFF button), the respective flow meter does not send any signal of water passing through.
Check the grinding fineness of the coffee and check and replace the flow meter, if necessary.

AL08 **Free-flow delivery time-out (** ON/OFF button**)**
This is not a blocking alarm.
It appears when the main running program of the appliance signals that a delivery group has been continuously operating for more than **4 minutes**; it thus stops it.

4.6 DIAGRAMS FOR ELECTRONIC BOARD CONNECTIONS

S3 EK - Front control board connections

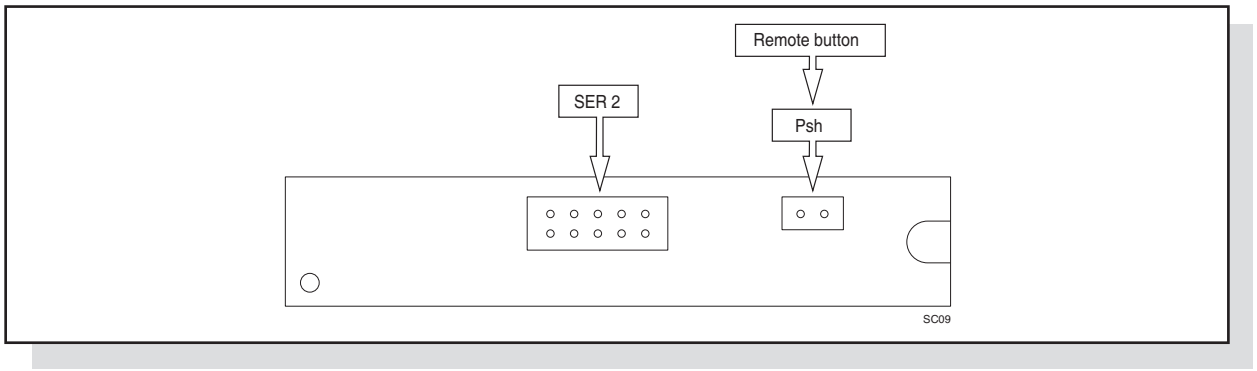

S3 EK - Base main control board connections

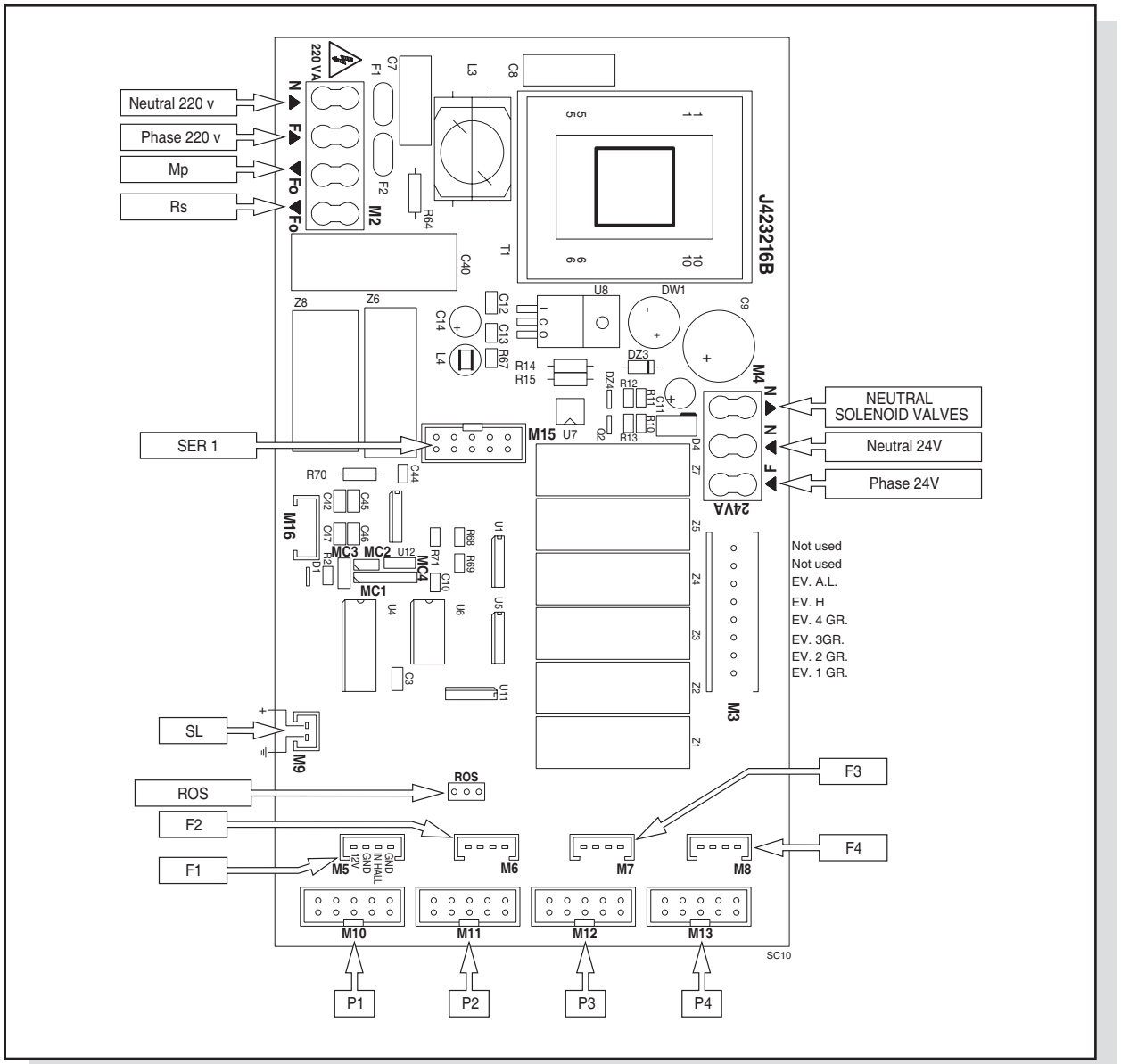

S3 Seletron - Front control board display connections

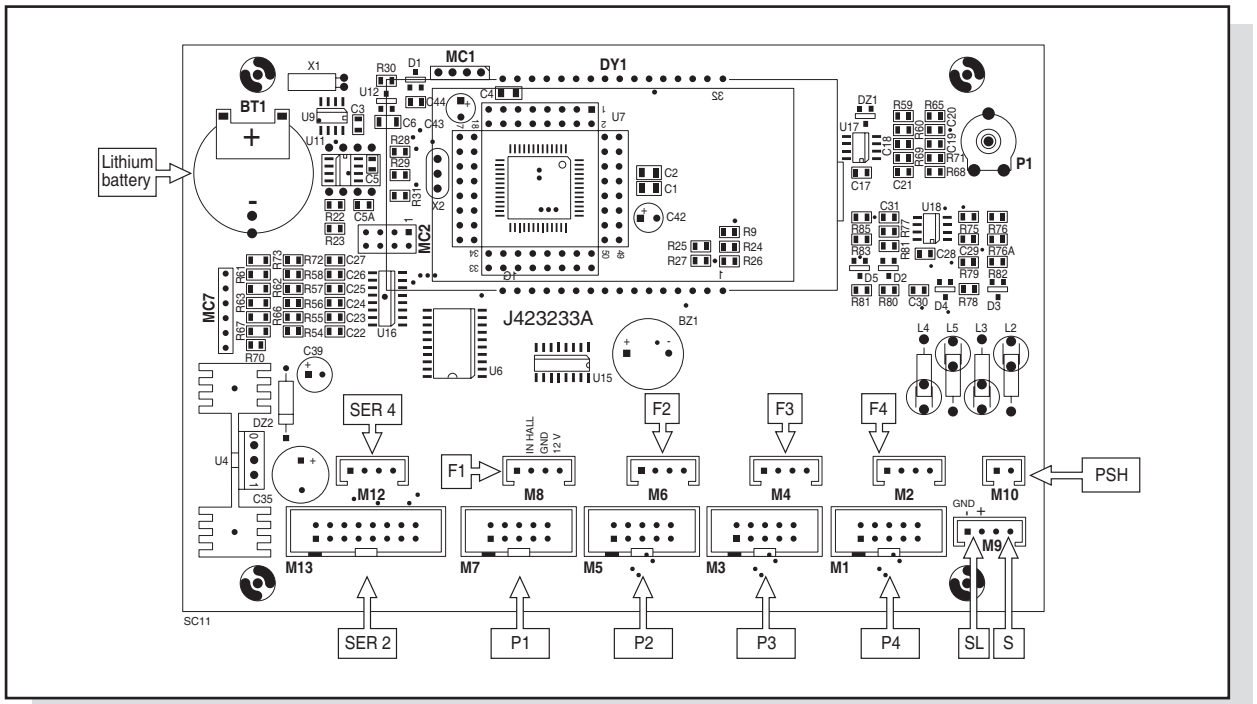

S3 Seletron - Base main control board

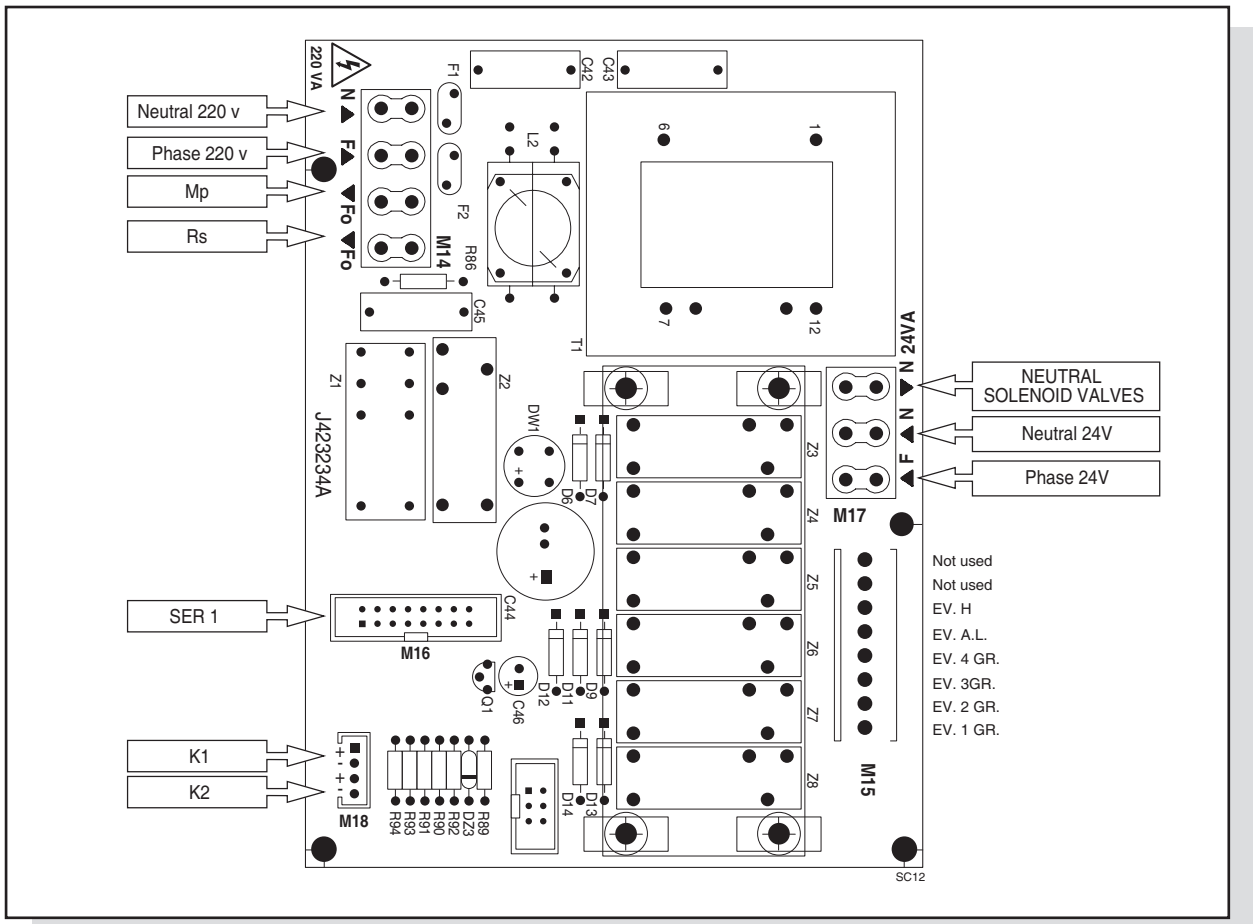

4.7 WIRING DIAGRAMS

S3 EP

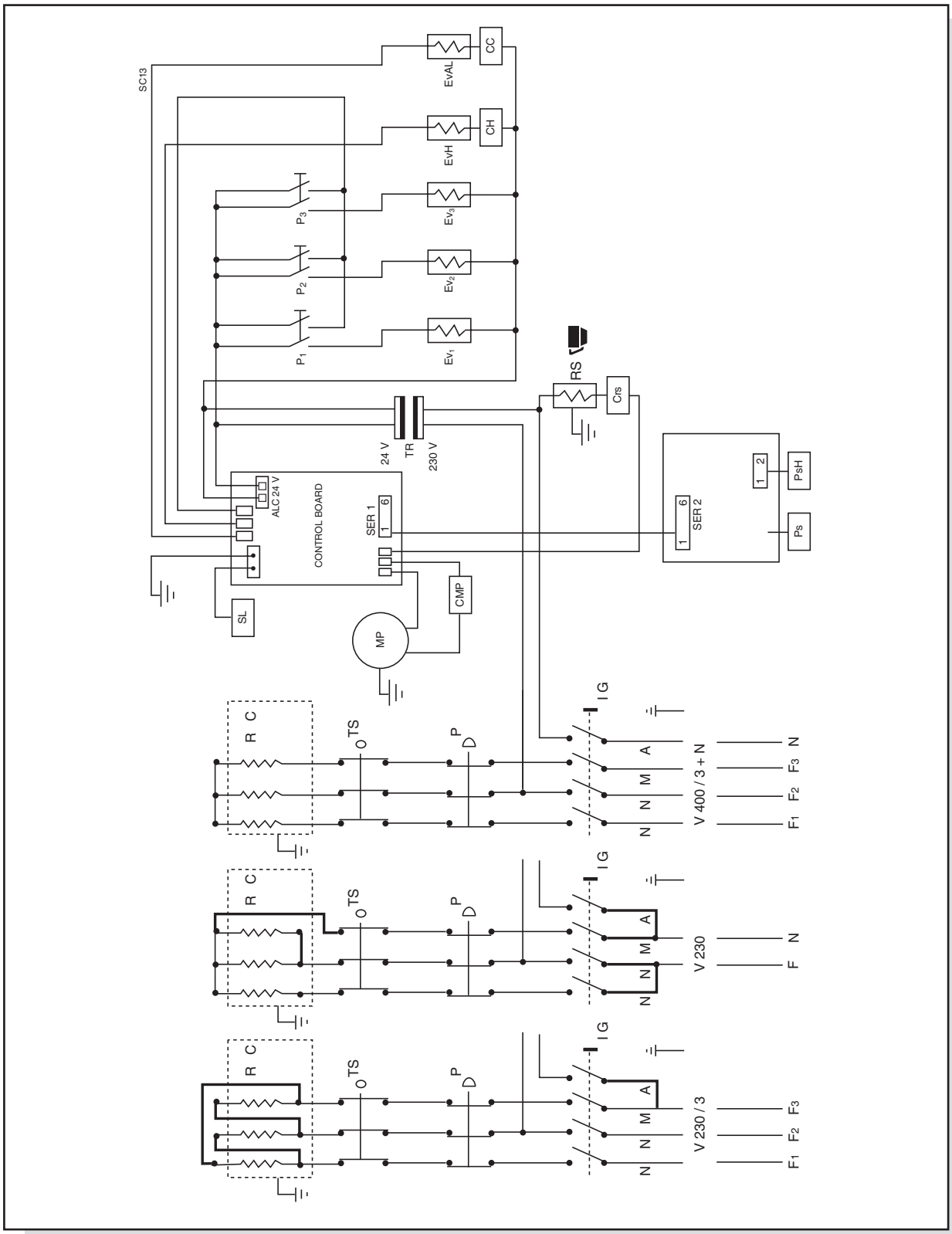

⚠ **TRANSFORMATION FROM 400/3+N TO 230 SINGLE PHASE POSSIBLE ONLY ON MODELS WITH 2-3 GROUPS**

S3 EK

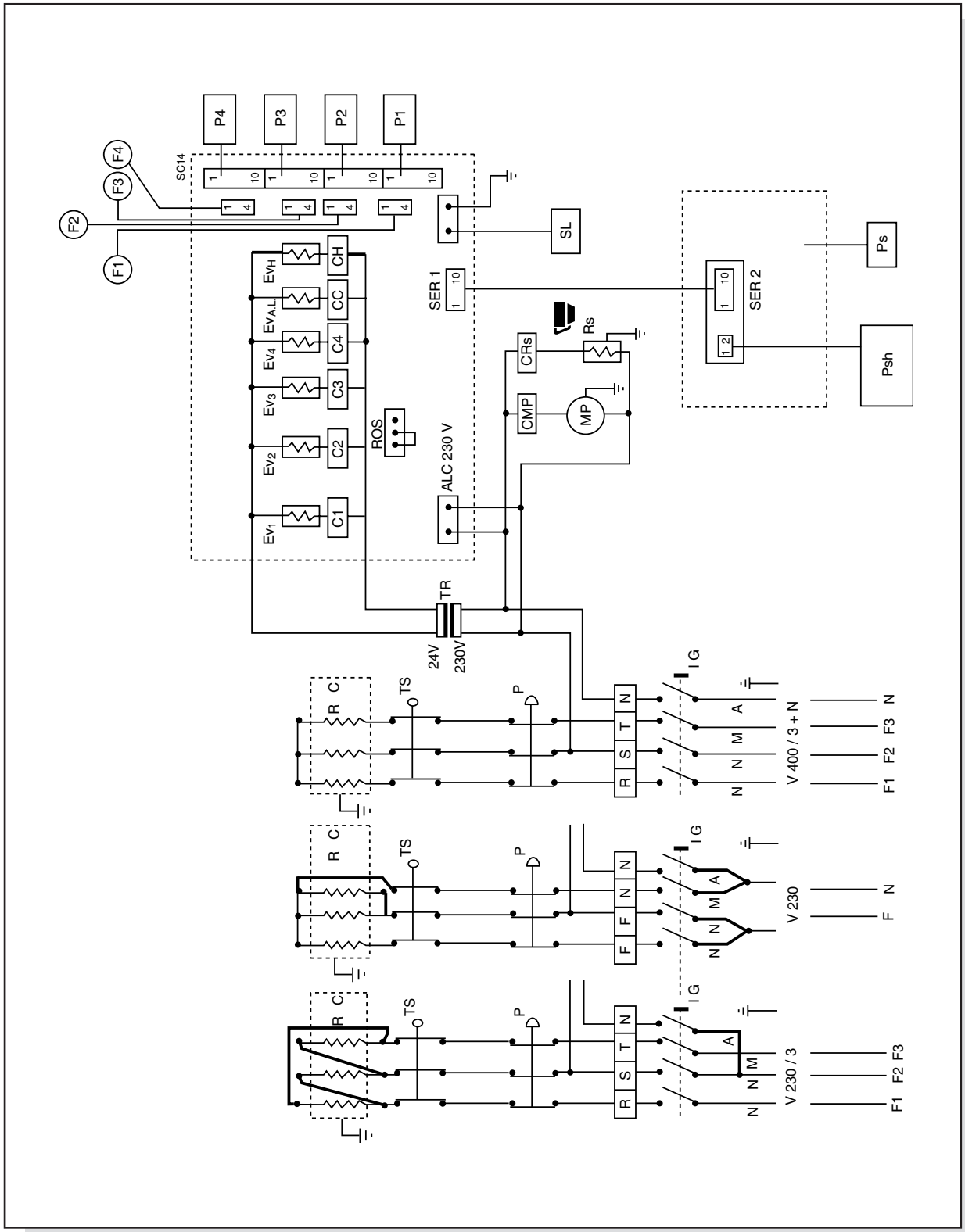

⚠ **TRANSFORMATION FROM 400/3+N TO 230 SINGLE PHASE POSSIBLE ONLY ON MODELS WITH 2-3 GROUPS**

S3 Seletron

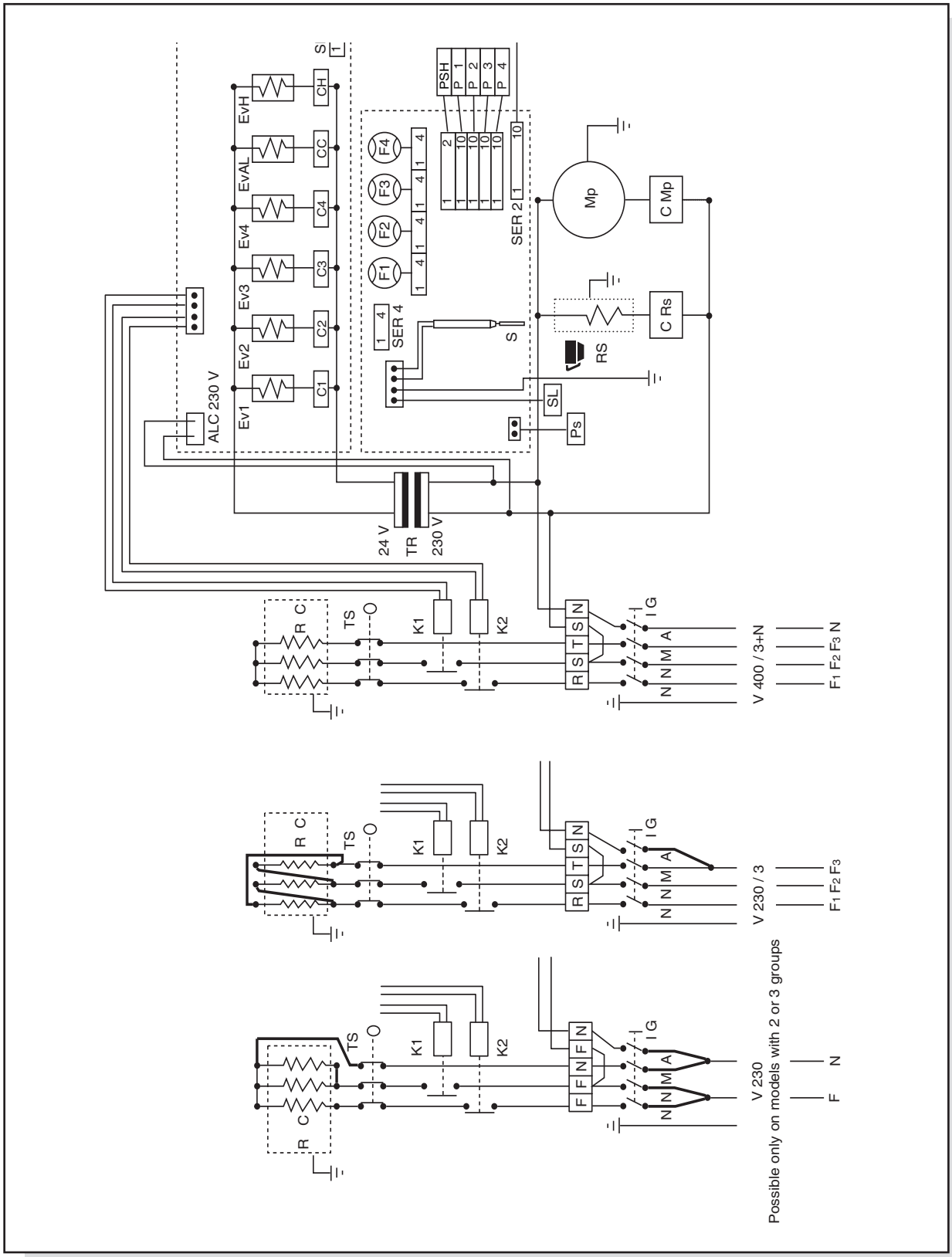

⚠ **TRANSFORMATION FROM 400/3+N TO 230 SINGLE PHASE POSSIBLE ONLY ON MODELS WITH 2-3 GROUPS**

KEY TO WIRING DIAGRAM

- **ALC** Control board power supply
- **MP** Motor pump
- **RS** Cup warmer heating element
- **RC** Boiler heating element
- **EVAL** Solenoid valve, automatic water refill
- **EV1** Solenoid valve, 1st group from the right
- **EV2** Solenoid valve, 2nd group from the right
- **EV3** Solenoid valve, 3rd group from the right
- **EV4** Solenoid valve, 4th group from the right
- **P1** Touchpad, 1st group from the right
- **P2** Touchpad, 2nd group from the right
- **P3** Touchpad, 3rd group from the right
- **P4** Touchpad, 4th group from the right
- **PS** Cup warmer button
- **SL** or **G** Control for water level in the boiler
- **S** Temperature probe in the boiler
- **F1** Flow meter for 1st group from the right
- **F2** Flow meter for 2nd group from the right
- **F3** Flow meter for 3rd group from the right
- **F4** Flow meter for 4th group from the right
- **IG** Main switch
- **K1** and **K2** Static relays
- **TS** Safety thermostat with manual reset
- **TR** Transformer for solenoid valve
- **CRS** Control board relay controlling the cup warmer heating element
- **CMP** Control board relay controlling the motor pump.
- **C1** Control board relay controlling the solenoid valve 1st group from the right
- **C2** Control board relay controlling the solenoid valve 2ndt group from the right
- **C3** Control board relay controlling the solenoid valve 3rd group from the right
- **C4** Control board relay controlling the solenoid valve 4th group from the right
- **CC** Control board relay to control the automatic water level solenoid valve
- **CH** Control board relay to control the hot water delivery solenoid valve
- **P** Heating element pressure switch
- **SER 1** Display connection on base main control board
- **SER 2** Display board connection on base main control board
- **SER 4** Serial Outlet Connection
- **ROS** Water level control selector
- **EVH** Hot water delivery solenoid valve
- **PSH** Hot water delivery button

4.8 COMPONENTS

S3 EP

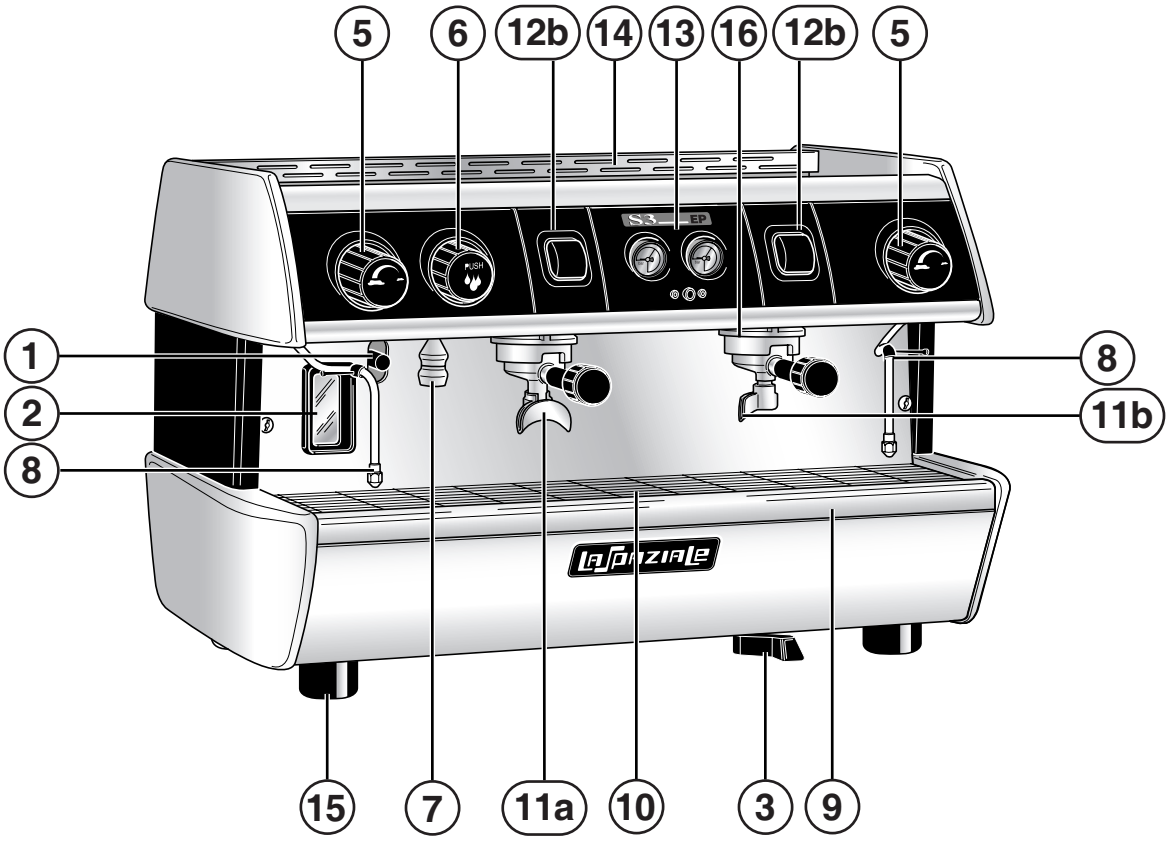

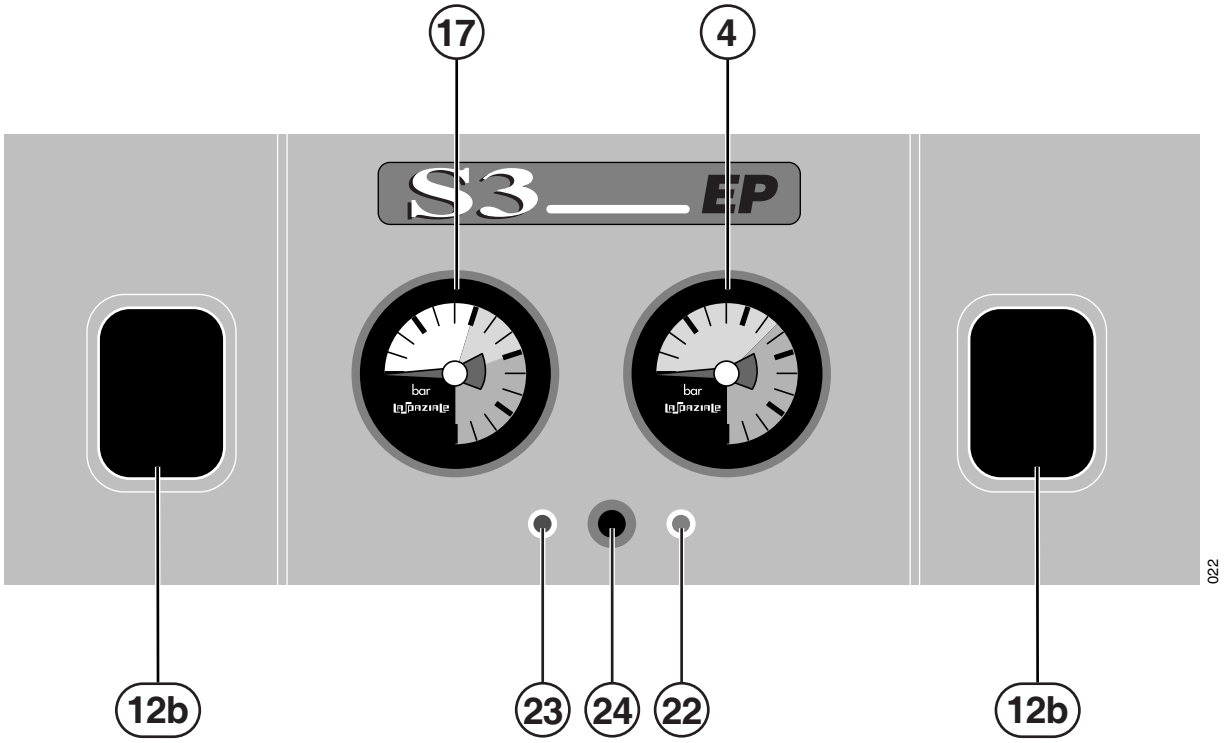

S3 EK

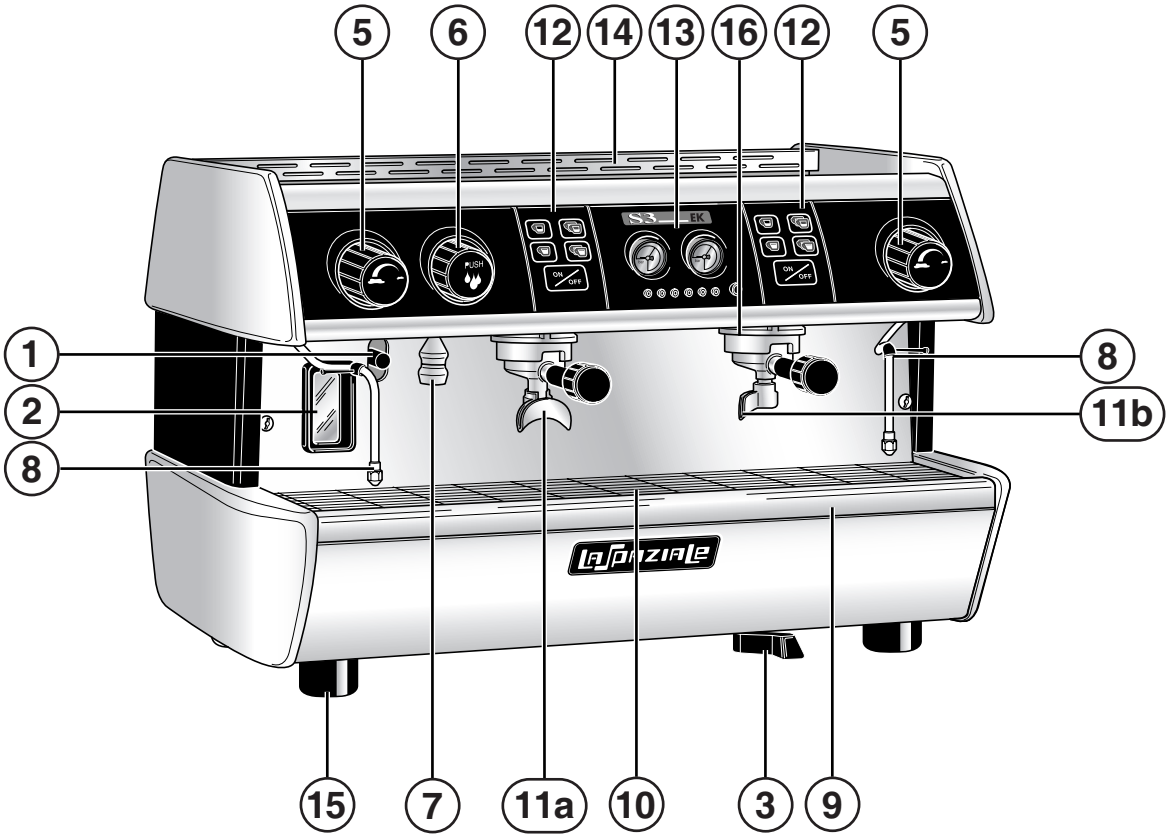
5
6
12
14
13
16
12
5
1
2
8
8
11b
15
7
11a
10
3
9

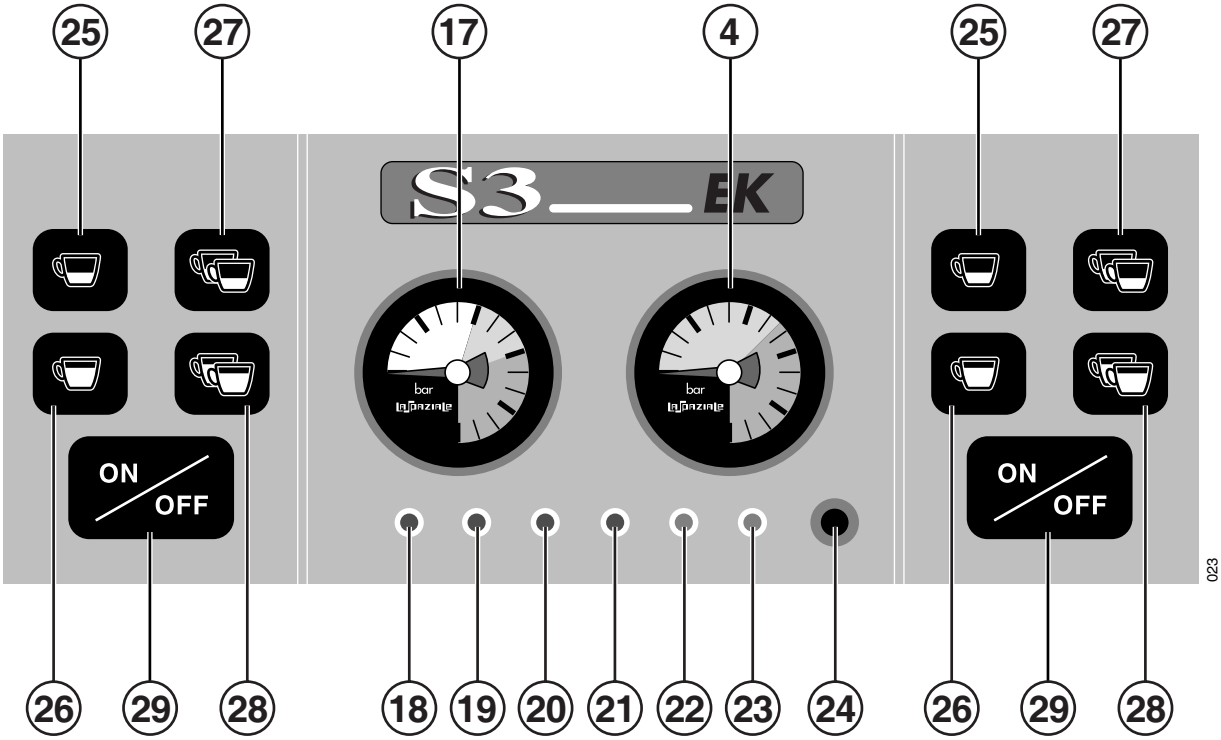
25
27
17
4
25
27
S3 EK
bar
bar
ON
OFF
ON
OFF
023
26
29
28
18
19
20
21
22
23
24
26
29
28

S3 Seletron

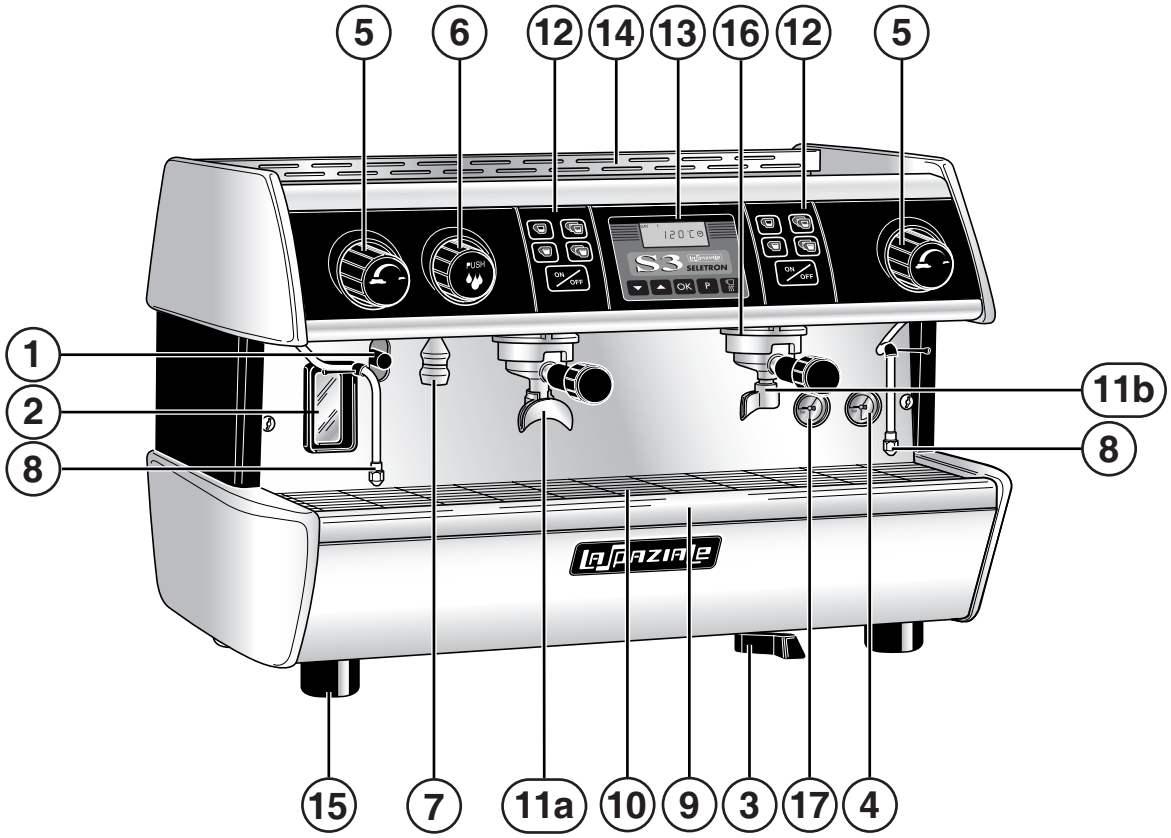
5
6
12
14
13
16
12
5
1
2
8
11b
8
15
7
11a
10
9
3
17
4

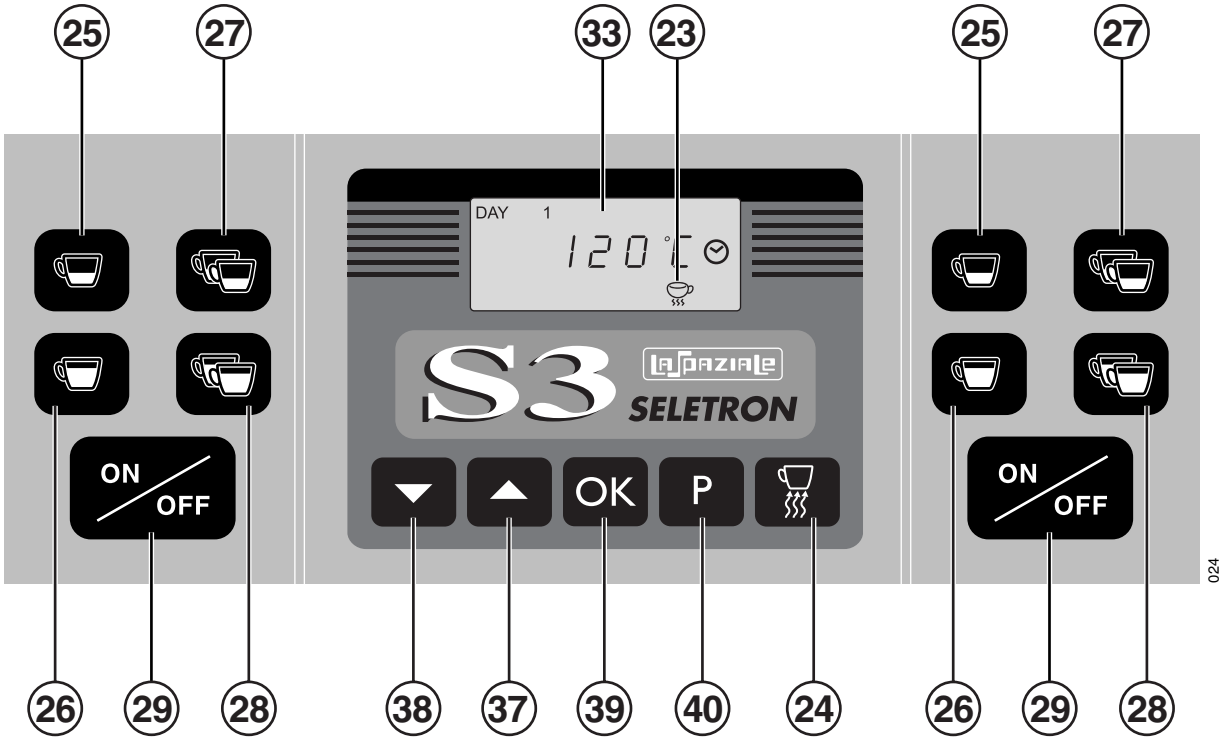
25
27
33
23
25
27
DAY 1
120°C
S3
LA PAZIALE
SELETRON
ON
OFF
OK
P
ON
OFF
026
26
29
28
38
37
39
40
24
26
29
28

KEY TO PARTS

1 Tap for manual boiler filling
2 Boiler water level gauge
3 Main switch
4 Boiler pressure gauge
5 Steam dispensing knob
6 Hot water dispensing knob
7 Hot water spout
8 Steam wand
9 Water drip tray
10 Drip tray grid
11a 2-cup filter holder
11b 1-cup filter holder
12 Group delivery control with automatic and manual doses
12b Group delivery control – Mod. EP - Super Elettrik
13 Control panel
14 Top cup grid
15 Adjustable feet for the appliance
16 Coffee delivery group
17 Motor pump pressure gauge
18 Control light 4th group from the right
19 Control light 3rd group from the right
20 Control light 2nd group from the right
21 Control light 1st group from the right
22 Power control light
23 Electric cup warmer control light
24 Electric cup warmer button
25 1 short coffee button
26 1 long coffee button
27 2 short coffee button
28 2 long coffee button
29 Manual delivery button
37 Increase datum
38 Decrease datum
39 Data confirm button
40 Programming access button

5 S5 RANGE

☞ **Carry out the following procedures referring to the chapter "Parts" on page 82.**

ELECTRONIC CONTROL BOARD SETTING

The electronic control board can be set to control two different water level controls (probe or floater) and to control the two different versions of group delivery (**EK** or **EP**).
The electronic control board has a selector (see Pict 1 - chapter 5.5) for board configuration.

- **WATER LEVEL CONTROL**

According to the type of boiler water level control, it is necessary to set the electronic control board as follows:
- Move the selector to "**S**" if a **PROBE** water level control is used (conduction probe).
- Move the selector to "**R**" if a **FLOATER** water level control is used (magnetic reed).

- **GROUP DELIVERY CONTROL**

According to the type of group delivery control on the appliance, it is necessary to set the electronic control board as follows:
- Move the selector to "**EK**" if a 5-selection touchpad is used with programmable doses (automatic version).
- Move the selector to "**EP**" if a 1-key touchpad is used (semiautomatic version).

☞ **NOTE. These settings are made by the manufacturer during the testing phase!**
Only after replacing the electronic control board, make sure that the new board is pre-set in for the type of water level and delivery controls on the appliance.

5.1 EP MODEL

☞ **This appliance is equipped with an electronic control board which controls the water level in the boiler, and the activation of the motor pump and of the cup warmer heating element. It also controls the heat regulation of the boiler temperature and possible malfunctions to be viewed on the display in the form of symbols.**

When the appliance is switched on, the electronic part carries out a check; all symbols on the control panel are switched on from left to right. At the end of this stage, the symbol for the temperature setting will start to flash to indicate that the appliance is heating up.

SETTING THE OPERATING TEMPERATURE FOR ELECTRIC HEATING

The electric heating system of the appliance is already set by the manufacturer to work at **120 °C** in the boiler, corresponding to **1 bar** boiler pressure and one thermic differential (ΔT) of **1 °C**. The temperature is viewed on the control panel. It is also possible to check the boiler pressure on the pressure gauge (4) on the appliance.

☞ **NOTE.** It is possible to deactivate the electric heating of the heating elements by pressing the button (32) on the programming panel. Once deactivated, the relevant symbol (34) on the control panel will switch off to indicate this state. To reactivate the electric heating, press the button (32) again: the symbol (34) will switch on.

It can be useful to deactivate the electric heating system in appliances equipped with gas system.

The procedures necessary to change the operating temperature are listed in the following paragraph.

SETTING NEW OPERATING TEMPERATURE PARAMETERS

- Hold down the button P (40) on the programming panel for **5 seconds**; the symbol on the control panel for the set temperature will remain lit while the other symbols will switch off.
- Use the buttons + (37) or - (38) to change the setting.
- Press the button P (40) to quit the programming function.

☞ **NOTE. The operating temperature (boiler pressure) is usually modified exclusively to adapt the machine temperature to the type of coffee blend used, so as to improve the result in the cup.**

TEMPERATURE PROBE CALIBRATION

- Switch off the appliance.
- Press and hold down the button P (40) and switch on the appliance.
- The "**120**" symbol will light up on the control panel and the temperature will automatically be set to **120 °C.** It is possible to check the status of the heating elements with the relevant symbol (34): if lit, it means that the SET Temperature has been reached; if flashing, it indicates the heating phase.
- Using the buttons + (37) or - (38) you can change this datum. Each time that the buttons are pressed, probe calibration is changed by **0.5 °C.**
  If the symbol after "**120**" is flashing, this means that a change of **0.5 °C** has been made; if it is lit, the change is **1 °C**.

☞ **NOTE. Probe calibration is performed by the manufacturer during the appliance testing phase. Only perform the above procedure after temperature probe replacement.**

ELECTRIC CUP WARMER (optional)

Press the cup warmer operating button (24) and check its operating status through the lighting up of the LED (23) on the control panel. To switch it off, press the same button.

5.2 ALARM MANAGER – EP MODEL

This model communicates any anomalies through the relevant symbols on the control panel and touchpads.

1. ALL DOSE SYMBOLS ON ALL TOUCHPADS FLASHING AND TEMPERATURE SYMBOLS SWITCHED OFF:

- The automatic refill system for the boiler has been operating for longer than **3 minutes** (total block of all machine operations). To restore normal operation, switch the machine off using the main switch. If the problem occurs again, check the automatic refill system for the boiler.

2. "125 °C" SYMBOL LIT AND ALL OTHER SYMBOLS SWITCHED OFF:

- When the temperature detected by the probe is above **140 °C**.
  Check the temperature probe connections to the control board or replace the probe. Alternatively, check the operation of the static relays.

3. "105 °C" SYMBOL LIT AND ALL OTHER SYMBOLS SWITCHED OFF:

- When, **20 minutes** after switching on, the temperature detected by the probe is less than **60 °C**.
  Check the temperature probe connections to the control board or replace the probe. Alternatively, check the safety thermostat.

4. ALL TEMPERATURE SYMBOLS FLASHING AND ALL TOUCHPAD SYMBOLS SWITCHED OFF:

- There is a temperature probe short circuit or interruption.
  Check the temperature probe connections to the control board or replace the probe.

5. M.A.T. SYSTEM DELIVERY BUTTON SYMBOL SWITCHED OFF (only if present):

- There is an **M.A.T.** temperature probe short circuit or failure.
  Check the temperature probe connections of the system - **M.A.T.** – to the control board or replace the complete steam wand with probe.

☞ **NOTE. When this alarm condition occurs, it is still possible to foam milk automatically by holding down the M.A.T. delivery button (43) until the required temperature is reached. When the button is released, steam delivery will stop.**

6 TECHNICAL ASSISTANCE SYMBOL LIT
(only if SERVICE management has been set for Technical Assistance):

- This means the number of pre-set solenoid valve action cycles has reached the set alarm threshold. Enter and set a new number of solenoid valve cycles.

7. TECHNICAL ASSISTANCE SYMBOL FLASHING
(only if FILTER management has been set for Technical Assistance):

- This means the number of pre-filled litres for the softener has reached the set alarm threshold. Set and fill with a new number of litres for the softener filter.

8. ***"ERROR TX" ON TECHNICAL ASSISTANCE DISPLAY (only with display connected)***

- This means there has been a failed or incomplete data transmission to the electronic control board. Check the connection between the control board connector and the display connector.

9. "ERROR RX" ON TECHNICAL ASSISTANCE DISPLAY (only with display connected)

- This means there has been a failed or incomplete data receipt by the electronic control board. Check the connection between the control board connector and the display connector.

5.3 EK MODEL

This appliance is equipped with an electronic control board which controls the water level in the boiler, and the activation of the motor pump and of the cup warmer heating element.
It also controls the doses of the delivery groups on the EK version (since the appliance has a water dosing system using flow meters), heat regulation of the boiler temperature and possible malfunctions to be viewed on the display in the form of symbols.

When the appliance is switched on, the electronic part carries out a check; all symbols on the control panel are switched on from left to right. At the end of this stage, the symbol for the temperature setting will start to flash to indicate that the appliance is heating up.

SETTING THE OPERATING TEMPERATURE FOR ELECTRIC HEATING

The electric heating system of the appliance is already set by the manufacturer to work at **120 °C** in the boiler, corresponding to **1 bar** boiler pressure and one thermic differential (ΔT) of **1 °C**. The temperature is viewed on the control panel. It is also possible to check the boiler pressure on the pressure gauge (4) on the appliance.

NOTE It is possible to deactivate the electric heating of the heating elements by pressing the button (32) on the programming panel. Once deactivated, the relevant symbol (34) on the control panel will switch off to indicate this state. To reactivate the electric heating, press the button (32) again: the symbol (34) will switch on.

It can be useful to deactivate the electric heating system in appliances equipped with gas system.

The procedures necessary to change the operating temperature are listed in the following paragraph.

SETTING NEW OPERATING TEMPERATURE PARAMETERS

- Hold down the button P (40) on the programming panel for **5 seconds**; the symbol on the control panel for the set temperature will remain lit while the other symbols will switch off.
- Use the buttons + (37) or - (38) to change the setting.
- Press the button P (40) to quit the programming function.

NOTE. The boiler pressure (operating temperature) is usually modified exclusively in order to adapt the machine temperature to the type of coffee blend used, so as to improve the result in the cup.

TEMPERATURE PROBE CALIBRATION

- Switch off the appliance.
- Press and hold down the button P (40) and switch on the appliance.
- The "**120**" symbol will light up on the control panel and the temperature will automatically be set to **120 °C**. It is possible to check the status of the heating elements with the relevant symbol (34): if lit, it means that the SET Temperature has been reached; if flashing, it indicates the heating phase.
- Using the buttons + (37) or - (38) you can change this datum. Each time that the buttons are pressed, probe calibration is changed by **0.5 °C.**
  If the symbol after "**120**" is flashing, this means that a change of **0.5 °C** has been made; if it is lit, the change is **1 °C**.

☞ **NOTE. Probe calibration is performed by the manufacturer during the appliance testing phase. Only perform the above procedure after temperature probe replacement.**

GROUP DOSE SETTING – EK MODEL

1° Hold down the free flow button (29) on the first touchpad from the right (1st GROUP) for about 5 seconds, until the symbol ✱ begins to flash (the dose symbols stay lit) and all the symbols on the other touchpads switch off.

2° Within **30 seconds** fasten a filter holder (11 b) containing a dose of ground coffee to the group; put a cup below the filter holder and press the button "**1 short coffee**" (25) on the corresponding touchpad. The symbol for the selected dose will remain lit to indicate that the dose is being set. The symbol ✱ flashes while all others are switched off.

3° When the coffee reaches the required dose, press the button "**1 short coffee**" (25) again to stop the coffee delivery and confirm the required dose. When the dose has been set, the relevant symbol will switch off to show that programming is complete.

4° Repeat this operation for the other buttons (26-27-28), also on the touchpad on the right.

☞ **NOTE. Carry out this procedure to program the remaining doses, using the 1-cup filter holder (11b) or the 2-cup one (11a), according to the type of dose to be programmed.**

☞ **NOTE. To quit the programming function, press the free flow delivery button (29) for 5 seconds or, alternatively, wait 1 minute to quit the function automatically.**

⚠ **WARNING!**
By setting the doses on the first touchpad on the right, automatically the other groups will be acquiring the same doses; if you want to set a group with different doses, repeat the same dose setting procedure on the touchpad corresponding to the group you want to program differently.

ELECTRIC CUP WARMER (optional)

Press the cup warmer operating button (24) and check its operating status through the lighting up of the LED (23) on the control panel. To switch it off, press the same button.

TIMED HOT WATER POURING TO PREPARE INFUSIONS - A.T. - (optional)

1° Hold down the free flow delivery button (29) of the first touchpad on the right (1st GROUP) for about **5 seconds**, until the symbol ✱ starts to flash (the dose symbols will remain lit) and the symbols of all the other touchpads switch off.

2° The symbol on the timed water delivery button will start to flash.

3° Press the button for timed hot water delivery (42); the symbol will stop flashing and stay lit to indicate that programming is in progress.

4° When the dose has reached the required amount, press the button (42) again to stop.

☞ **NOTE. To quit the programming function, press the free flow delivery button (29) for 5 seconds or, alternatively, wait 1 minute to quit the function automatically.**

5.4 ALARM CONTROL - EK MODEL

This model communicates any anomalies through the relevant symbols on the control panel and touchpads.

1. SYMBOL CORRESPONDING TO THE COFFEE DOSE BUTTON ON DELIVERY MODE, FLASHING AFTER 5-6 SECONDS:

- Coffee ground too finely.
- Missing reading of the pulses sent by the flow meter to the delivery group.

2. ALL DOSE SYMBOLS ON ALL TOUCHPADS FLASHING AND TEMPERATURE SYMBOLS SWITCHED OFF:

- The automatic refill system for the boiler has been operating for longer than **3 minutes** (total block of all machine operations). To restore normal operation, switch the machine off using the main switch. If the problem occurs again, check the automatic refill system for the boiler.

3. "125 °C" SYMBOL LIT AND ALL OTHER SYMBOLS SWITCHED OFF:

- When the temperature detected by the probe is above **140 °C**.
  Check the temperature probe connections to the control board or replace the probe. Alternatively, check the operation of the static relays.

4. "105 °C" SYMBOL LIT AND ALL OTHER SYMBOLS SWITCHED OFF:

- When, **20 minutes** after switching on, the temperature detected by the probe is less than **60 °C**.
  Check the temperature probe connections to the control board or replace the probe. Alternatively, check the safety thermostat.

5. ALL TEMPERATURE SYMBOLS FLASHING AND ALL TOUCHPAD SYMBOLS SWITCHED OFF:

- There is a temperature probe short circuit or interruption.
  Check the temperature probe connections to the control board or replace the probe.

6 M.A.T. SYSTEM DELIVERY BUTTON SYMBOL SWITCHED OFF:

- There is an M.A.T. temperature probe short circuit or failure.
  Check the temperature probe connections of the system - M.A.T. – to the control board or replace the complete steam wand with probe.

☞ **NOTE. When this alarm condition occurs, it is still possible to foam milk automatically by holding down the M.A.T. delivery button (44) until the required temperature is reached. When the button is released, steam delivery will stop.**

7 TECHNICAL ASSISTANCE SYMBOL LIT
(only if SERVICE management has been set for Technical Assistance):

- This means the number of pre-set solenoid valve action cycles has reached the set alarm threshold.
  Enter and set a new number of solenoid valve cycles.

8 TECHNICAL ASSISTANCE SYMBOL FLASHING
(only if FILTER management has been set for Technical Assistance):

- This means the number of pre-filled litres for the softener has reached the set alarm threshold.
  Set and fill with a new number of litres for the softener filter.

9 "ERROR TX" ON TECHNICAL ASSISTANCE DISPLAY (only with display connected)

- This means there has been a failed or incomplete data transmission to the electronic control board.
  Check the connection between the control box connector and the display connector.

10 "ERROR RX" ON TECHNICAL ASSISTANCE DISPLAY (only with display connected)

- This means there has been a failed or incomplete data receipt by the electronic control board.
  Check the connection between the control board connector and the display connector.

5.5 AUTOMATIC MILK FOAMING SYSTEM WITH ADJUSTABLE TEMPERATURE - M.A.T. - (optional)

After the correct temperature setting process and the air suction adjustment, this system can be used for automatic milk foaming.

To program the set temperature, proceed as follows:

1. Switch off the appliance
2. Press and hold down together the buttons + (37) and - (38), on the programming touchpad and switch on the appliance using the main switch (3).
3. Only the previously set value for the temperature will remain lit on the control panel.

NOTE. The temperature value on the control panel must be converted back using the conversion table here below:

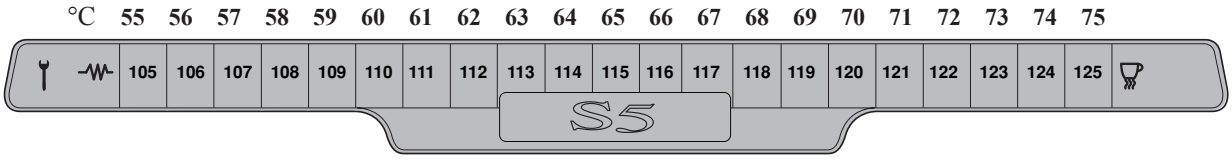

4. To change the setting, press the buttons + (37) and - (38).
5. To quit the programming function and store the new setting, switch the appliance off and then on again, using the main switch (3).

After setting the temperature, it is necessary to set the air suction using the milk foamer regulator behind the front panel, close to the steam wand with the steam wand with temperature probe (Pict 17).

Turn the adjustment screw anticlockwise to increase milk foaming.
Turn the adjustment screw anticlockwise to reduce milk foaming.

An approximate calibration is carried out during the test testing phase, loosening the adjustment screw by one and a half turns.

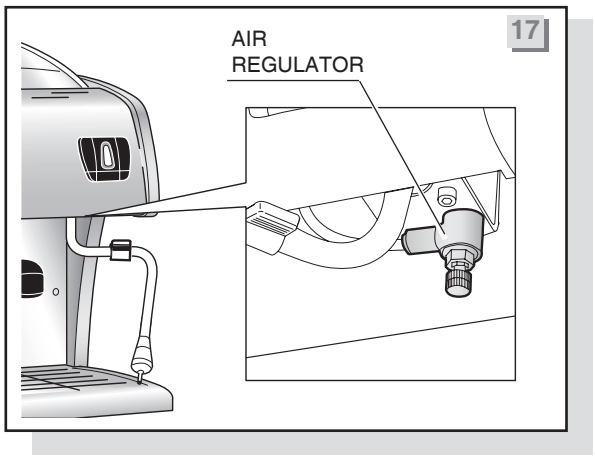

WARNING!
When adjusting the milk foaming level, take care not to touch the steam wand with temperature probe (45) or wear protective gloves, to prevent possible burns.

5.6 MILK SENSOR CALIBRATION (optional)

It is possible to calibrate the milk sensor in order to align the real temperature reading of the **PT1000** (system **M.A.T.** milk sensor) to the preset temperature.

- Switch the appliance off.
- Press the button + (37) and, keeping it pressed, switch the appliance on.
  The symbols **114 – 115 – 116** switch on on the control panel and they show the zero value of the calibration range.
- It is possible to change the datum pressing the buttons + (37) and - (38) : every time you press the button + (37) the symbols **117 - 118 - 119** etc. start flashing, every led switching on corresponds to a value variation of **+1° C** sensed by the milk sensor .
- It is possible to go back negatively in the calibration range pressing the button - (38).
- Every time you press the button - (38) the symbols **113 – 112 -111** etc. start flashing, every led switching off corresponds to a value variation of **-1° C** sensed by the milk sensor.
- Pressing the button + (37) it is possible to go on positively in the calibration range.

Switching the appliance off and on again, the datum is stored.
The milk sensor calibration has a range of **-9° C**, **+ 9°C**.

5.7 DELIVERY GROUP INDIVIDUAL TEMPERATURE CONTROL - I.T.C. - (optional)

This system makes it possible to set a different coffee brewing temperature for each delivery group.

☞ **The temperature of each group is independent from the temperature set in the boiler.**

To vary the temperature on a group, use the corresponding regulator alongside the group itself, which can be reached through the opening in the top of the, upper cup grid (14) (Pict 18).

Turn the adjustment screw anticlockwise to decrease the temperature.
Turn the adjustment screw clockwise to increase the temperature.

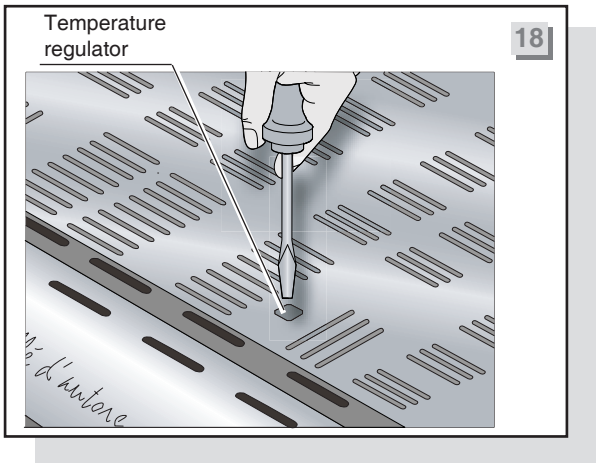

☞ **NOTE. Every full turn of the adjustment screw corresponds to a change of approximately 2 °C. Changes must only be made to adapt the temperature of the delivery group to the coffee blend being used, so as to improve the result in the cup.**

5.8 SCHEDULED TECHNICAL ASSISTANCE PROGRAM – G.A. - (optional)

The scheduled technical assistance program makes it possible to keep some appliance parameters under control, making it possible to set a minimum threshold after which an alarm signal is given.
The program makes it possible to organise regular routine maintenance for the delivery groups (enabling the **SERVICE** menu) and/or the replacement of the filter cartridge or resin regeneration for the softener (enabling the **FILTER** menu).

☞ **The appliances preset for this function still have the technical assistance program deactivated.**

☞ **NOTE. To enable these controls it is necessary to have the technical assistance display (Pict 19).**

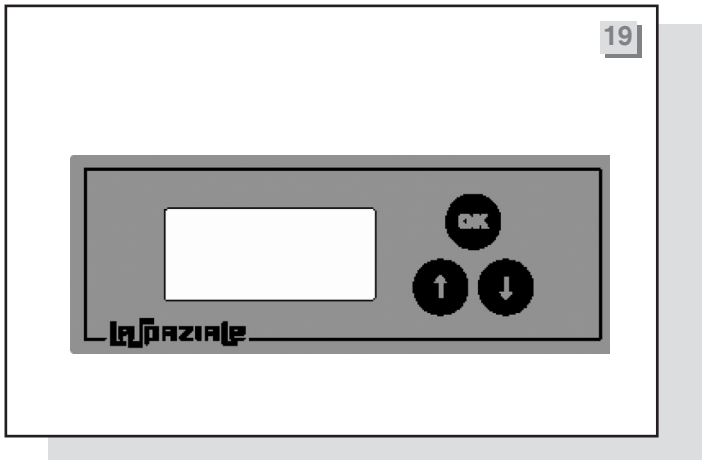

When the display is connected, it will read "**La Spaziale**" for about **5 seconds** followed by the version of the control board fitted on the machine for another **3 seconds**.

After the above cycle, the display will read:

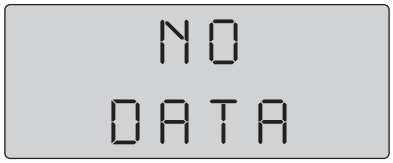

to indicate that the technical assistance is deactivated.

To enable one or both available controls, proceed as follows:
hold down the button OK for about **3 seconds**, this opens the **SERVICE** menu and the display will read:

Where "**Y**" (Yes) will be flashing. To select "**N**" (No) press one of the 2 arrow keys ↑↓,"**N**" will start to flash. If you press the button OK the control of delivery cycles will remain deactivated, passing directly to the softener **FILTER** settings.

If you confirm with "**Y**", pressing the button OK, you enable the control and move to the setting of the number of solenoid valve insertion cycles, a number which decreases at every delivery operation. The display now shows:

CYCLES
N. 00000

Where the first "**0**" on the right is flashing; when the button ↑ is pressed, this increases the number (**0 - 9**), while pressing the button ↓ moves onto the most important digit on the left (the selected digit flashes to indicate that it can be changed). Once the required delivery cycle value has been set, confirm the setting by pressing the button OK.

☞ **NOTE. The set number is not a count of the number of cups of coffee delivered by the appliance, it is just a control over the solenoid valve insertion cycles for the groups and therefore, for example, 100 solenoid valve cycles do not correspond to 100 delivered cups of coffee.**

Confirming the setting makes it possible to enter a minimum number of cycles which, when reached, will cause the appliance to display an alarm on the control panel (13) by switching on the relevant control light (43). The display will read:

ALARM
N. 00000

where the first "**0**" on the right is flashing. When the button ↑ is pressed, this increases the number (**0 - 9**), while pressing the button ↓ moves onto the most important digit on the left (the selected digit flashes to indicate that it can be changed). Once the delivery cycle alarm value has been set, confirm the setting by pressing the button OK.

☞ **NOTE. The number cannot be greater than or equal to the maximum number of solenoid valve cycles set previously.**

After confirming the setting, the program passes onto the settings for the softener FILTER menu.
The display will show:

FILTER
Y N

Where "**Y**" (Yes) will be flashing. To select "**N**" (No) press one of the 2 arrow keys ↑↓, **"N" will start to flash. If you press the button** OK the control of the softener filter remains deactivated, quitting the programming function and returning to the initial screen.

If you confirm with "**Y**", pressing the button OK, enables the control and allows the setting of the number of softener litres, after which it is necessary to replace the filter. The number decreases at every delivery operation. The display must read:

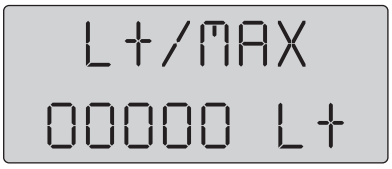

where the first "**0**" on the right is flashing. When the button ↑ is pressed, this increases the number (**0 - 9**), while pressing the button ↓ moves onto the most important digit on the left (the selected digit flashes to indicate that it can be changed). Once the litre value has been set, confirm the setting by pressing the button OK. At this point it is possible to enter a minimum number of litres, after which the appliance will display an alarm on the control panel (13) by switching on the relevant control light (43). The display will read:

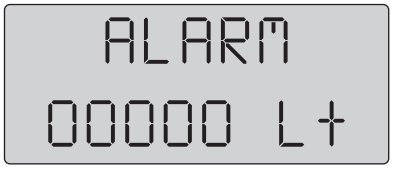

Where the first "**0**" on the right is flashing. Pressing the button ↑ will increase the number (**0 - 9**), while pressing the button ↓ moves to the most important digit on the left (the selected digit will flash to show that it can be changed). Once the litres value has been set, confirm the setting by pressing the button OK , and it is possible to quit the programming function.

☞ **NOTE. The number cannot be greater than or equal to the maximum number of solenoid valve cycles set previously.**

With the controls enabled and the display connected, the display will show the remaining number of cycles before it is necessary to proceed with maintenance

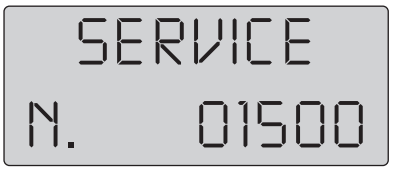

or the number of litres remaining before the softener **FILTER** cartridge needs to be replaced:

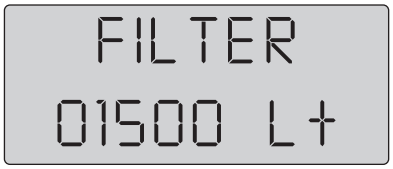

☞ **NOTE. the visualization is alternatively shown on the display only if both controls have been enabled, otherwise, only the enabled control is displayed.**
The number of cycles is decreased after every 50 solenoid valve activations. The number of litres for the filter is reduced after every 10 litres of water consumed.

Every time a new setting is stored to memory, the display will read

WRITING
DATA

Setting the softener filter parameters.

To access the menu to set softener filter parameters, press and hold down all three keys OK ↑ ↓ for **3 seconds**. The display will read:

IMPULSE
=0.54 ml

Where "**0.54 ml**" is the correspondence between a flow meter pulse and the amount of water delivered by the group given in millilitres. Pressing the buttons ↑ ↓ decreases or increases the setting (**0.30 ml – 0.90 ml**). Pressing the button OK confirms the setting and the display will read:

LEVEL
=1750 ml

Where "**1750 ml**" is the correspondence between 1 minute of operation of the automatic boiler refill system and the amount of water introduced, given in millilitres. Pressing the buttons ↑ ↓ increases/decreases the setting (**1000 ml – 2000 ml**). Pressing the button OK confirms the setting and returns to the initial display menu.

5.9 DIAGRAMS FOR ELECTRONIC BOARD CONNECTIONS

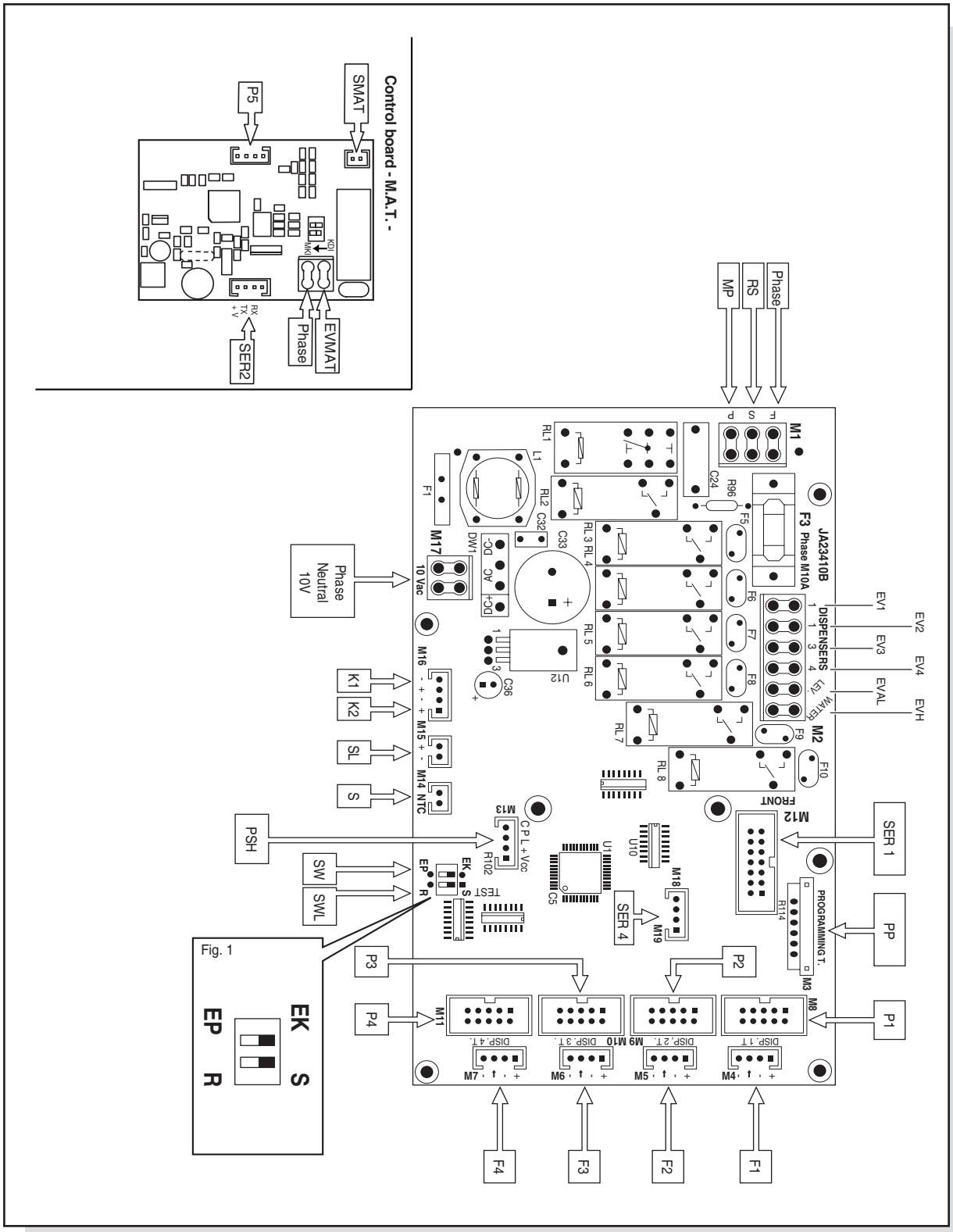

5.10 WIRING DIAGRAMS

S5 EP

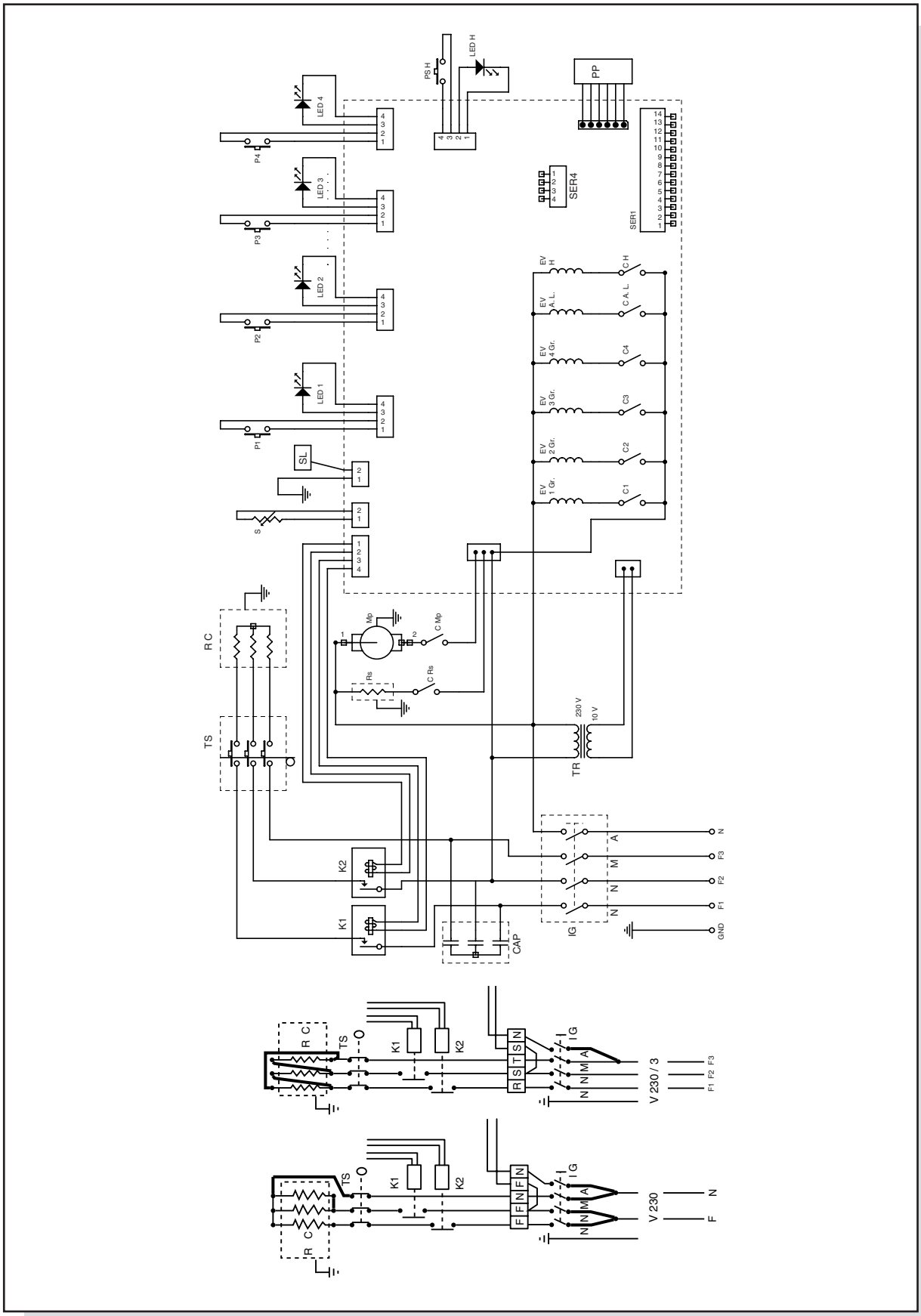

S5 EK

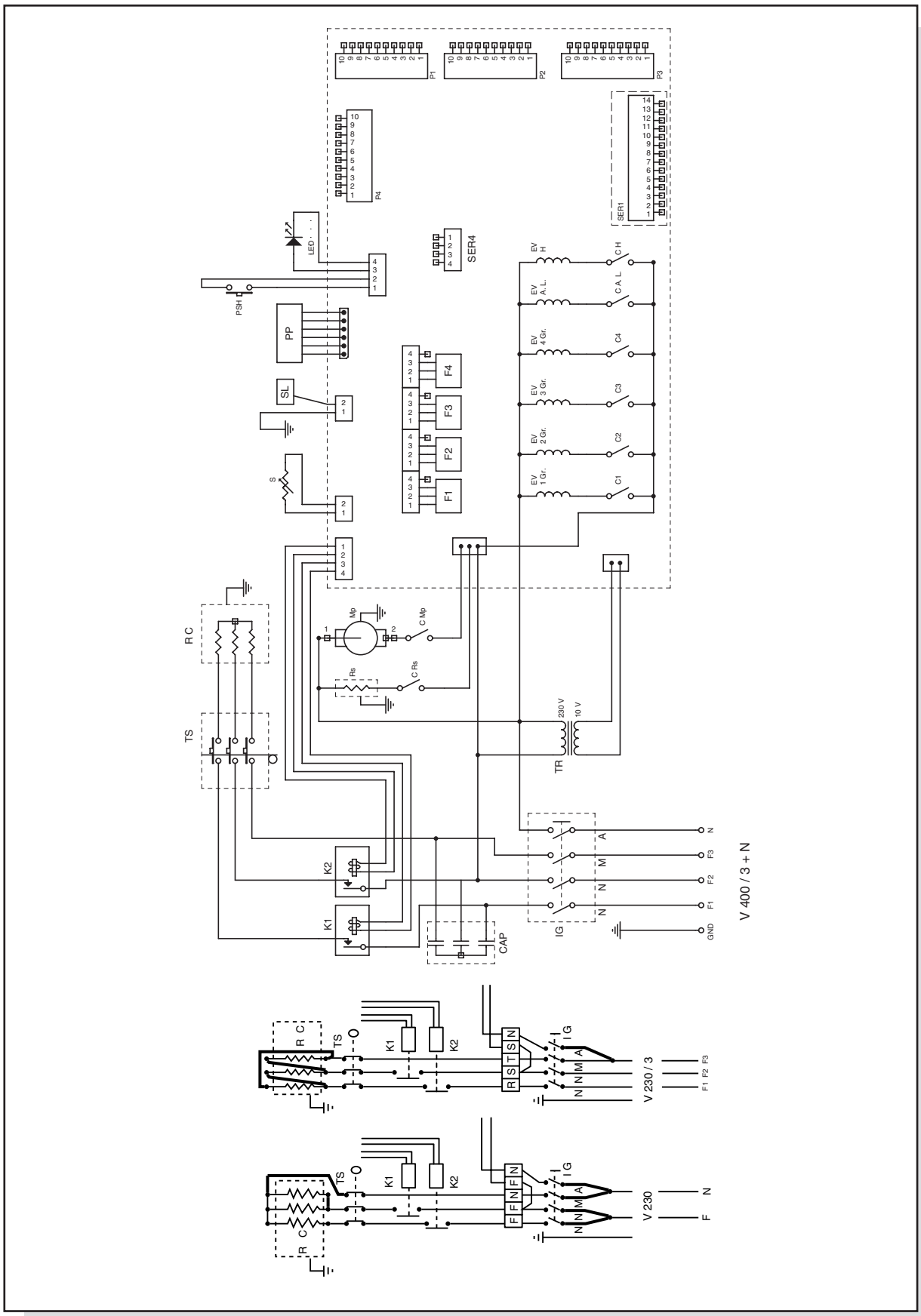
P1
P2
P3
P4
SER1
SER4
LED
PSH
PP
SL
S
F1
F2
F3
F4
EV H
EV A.L.
EV 4 Gr.
EV 3 Gr.
EV 2 Gr.
EV 1 Gr.
C H
C A.L.
C4
C3
C2
C1
Mp
C Mp
Rs
C Rs
230 V
10 V
TR
RC
TS
K2
K1
CAP
IG
N
F3
F2
F1
GND
V 400 / 3 + N
R S T N
F F N
V 230 / 3
V 230

KEY TO DIAGRAMS

- **MP** Motor pump
- **RS** Cup warmer heating element
- **RC** Boiler heating element
- **EVAL** Solenoid valve, automatic water refill
- **EV1** Solenoid valve, 1st group from the right
- **EV2** Solenoid valve, 2nd group from the right
- **EV3** Solenoid valve, 3rd group from the right
- **EV4** Solenoid valve, 4th group from the right
- **EVH** Solenoid valve, timed water (optional)
- **PSH** Timed water button (optional)
- **PP** Programming touchpad
- **P1** Touchpad, 1st group from the right
- **P2** Touchpad, 2nd group from the right
- **P3** Touchpad, 3rd group from the right
- **P4** Touchpad, 4th group from the right
- **SL** Control for water level in the boiler
- **S** Temperature probe in the boiler
- **F1** Flow meter for 1st group from the right
- **F2** Flow meter for 2nd group from the right
- **F3** Flow meter for 3rd group from the right
- **F4** Flow meter for 4th group from the right
- **IG** Main switch
- **K1** and **K2** Static relays
- **TS** Safety thermostat with manual reset
- **TR** Transformer for board
- **CRS** Control board relay controlling the cup warmer heating element
- **CMP** Control board relay controlling the motor-driven pump
- **C1** Control board relay controlling the solenoid valve, 1st group from the right
- **C2** Control board relay controlling the solenoid valve, 2nd group from the right
- **C3** Control board relay controlling the solenoid valve, 3rd group from the right
- **C4** Control board relay controlling the solenoid valve, 4th group from the right
- **CAL** Control board relay to control the automatic water level solenoid valve
- **CH** Control board relay to control the timed water solenoid valve
- **SER4** Serial connection RS232
- **SER1** Front panel connection to power board
- **P5** Button - M.A.T. -
- **SMAT** Probe - M.A.T. -
- **EVMAT** Solenoid valve - M.A.T. -
- **SER2** Technical assistance display connection -G.A.-

5.11 PARTS

S5

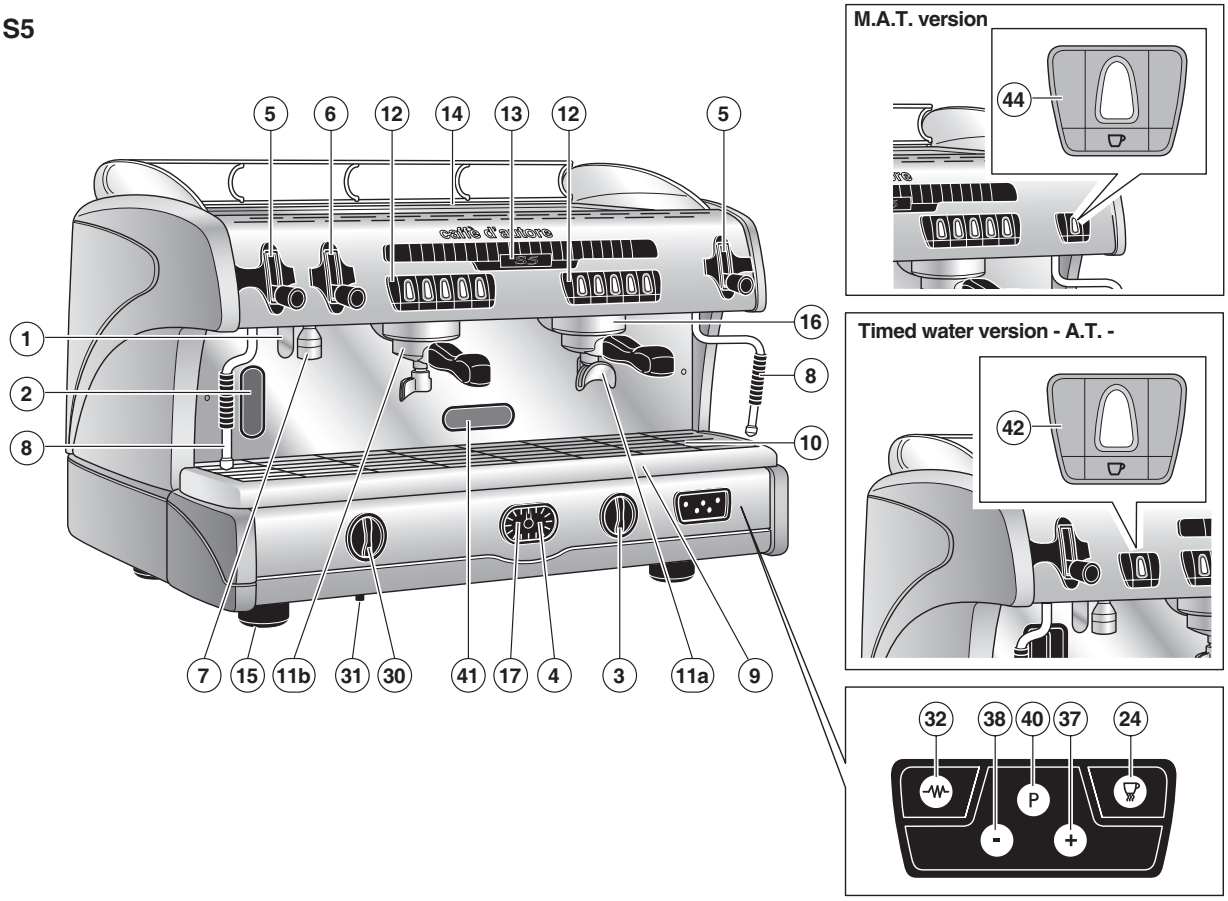

S5 EP

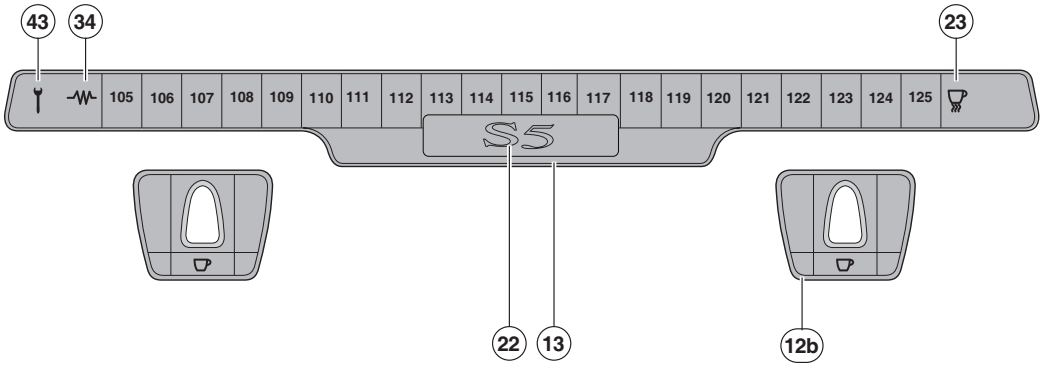

S5 EK

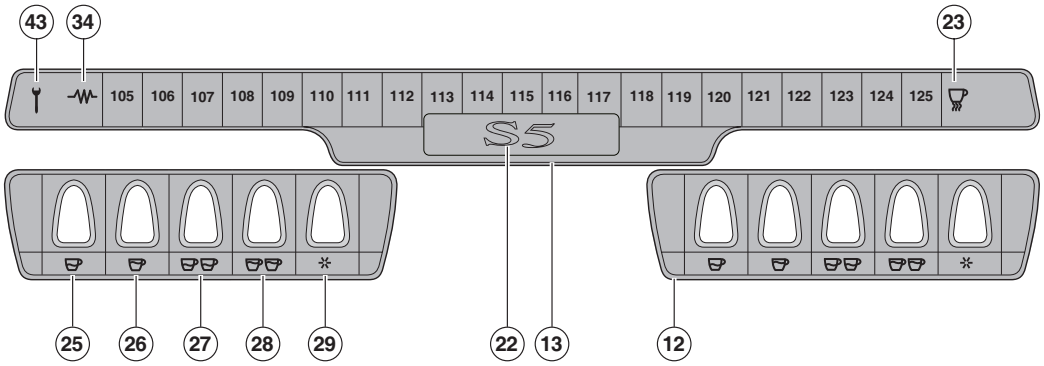

KEY TO PARTS

1 Tap for manual boiler filling
2 Boiler water level gauge
3 Main switch
4 Boiler pressure gauge
5 Steam delivery knob
6 Hot water delivery knob
7 Hot water spout
8 Steam wand
9 Water drip tray
10 Drip tray grid
11a 2-cup filter holder
11b 1-cup filter holder
12 Group delivery control with automatic and manual doses
12a Group delivery control - Mod. EC
12b Group delivery control - Mod. EP - Super Elettrik
12c Group delivery control - Mod. New 3000 - Super Ultra
13 Control panel
14 Top cup rack grid
15 Adjustable feet for the appliance
16 Coffee delivery group
17 Motor pump pressure gauge
18 Control light, 4th group from the right
19 Control light, 3rd group from the right
20 Control light, 2nd group from the right
21 Control light, 1st group from the right
22 Power control light
23 Electric cup warmer control light
24 Electric cup warmer button
25 1 short coffee button
26 1 long coffee button
27 2 short coffee button
28 2 long coffee button
29 Manual dispensing button
30 Control knob for gas delivery (optional)
31 Piezoelectric lighter for gas (optional)
32 Button for appliance electric heating
33 Display
34 Appliance electric heating status control light
35 Heating element status control light
36 Automatic boiler filler charge status control light
37 Increase datum
38 Decrease datum
39 Data confirm button
40 Programming access button
41 Inspection opening for gas burner
42 Button for timed water gas delivery - AT - (optional)
43 Technical assistance control light - GA -
44 Button for automatic steam gas delivery for milk foaming - M.A.T. - (optional)

6 COMPACT RANGE and S5 1 GROUP

☞ **Carry out the following procedures referring to the chapter "Parts" on page 90.**

☞ **NOTE. The electronic control board automatically controls the two group delivery control versions (EP or EK).**

6.1 EP MODEL

☞ **This model is equipped with an electronic control board which controls the water level in the boiler, and the activation of the motor pump and of the cup warmer heating element (optional).**
It also controls possible malfunctions to be viewed on the display.

OPERATING TEMPERATURE ADJUSTMENT FOR THE ELECTRIC HEATING SYSTEM

The electric heating system of the appliance is already set by the manufacturer to operate at a temperature of **120 °C** in the boiler, corresponding to **1 bar** boiler pressure. Boiler pressure is viewed on the pressure gauge (4) situated on the front panel of the appliance.

In order to increase or decrease the boiler pressure, it is necessary to operate on the electric pressure switch (Pict 20) which is inside the machine (on the right side), as indicated here below:

- Turn the adjustment screw anti-clockwise to increase boiler pressure.
- Turn the adjustment screw clockwise to decrease it.

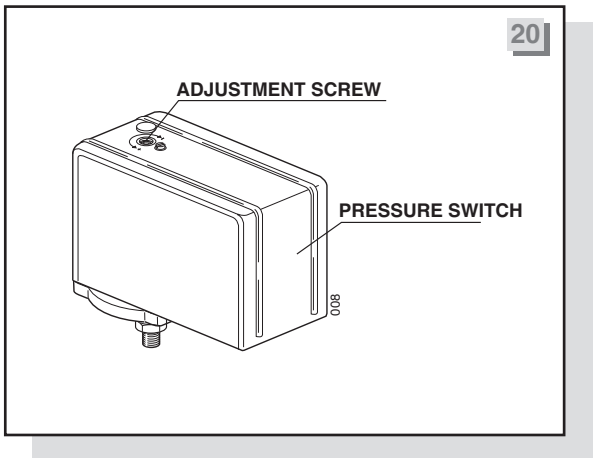

⚠ **WARNING!**
Cut off power while operating on the pressure switch.

Boiler pressure (at operating temperature) is normally modified exclusively in order to adapt the machine temperature to the particular type of coffee blend so as to obtain the best result in the cup.

ELECTRIC CUP WARMER (optional)

In the models equipped with the electric cup warmer, to activate it, move the main switch button (3) from position **1** (standard operation of the machine) to position **2**. To deactivate it, move it back to position **1**.

6.2 ALARM CONTROL – EP MODEL

This model communicates any anomalies through the relevant symbols on the control panel and touchpads.

TOUCHPAD SYMBOLS FLASHING ALTERNATELY:

- The automatic refill system for the boiler has been operating for longer than **3 minutes** (total block of all machine operations). To return to normal operation, turn off the machine with the main switch. If the problem is repeated, check the automatic refill system of the boiler.

6.3 EK MODEL

This model is equipped with an electronic control board which controls the water level in the boiler, and the activation of the motor pump and of the cup warmer heating element (optional). It also controls possible malfunctions to be viewed on touchpad symbols.

OPERATING TEMPERATURE ADJUSTMENT FOR THE ELECTRIC HEATING SYSTEM

The electric heating system of the appliance is already set by the manufacturer to operate at a temperature of **120 °C** in the boiler, corresponding to **1 bar** boiler pressure. Boiler pressure is viewed on the pressure gauge (4) situated on the front panel of the appliance.

In order to increase or decrease the boiler pressure, it is necessary to operate on the electric pressure switch (Pict 21) which is inside the machine (on the right side), as indicated here below:

- Turn the adjustment screw anti-clockwise to increase boiler pressure.
- Turn the adjustment screw clockwise to decrease it.

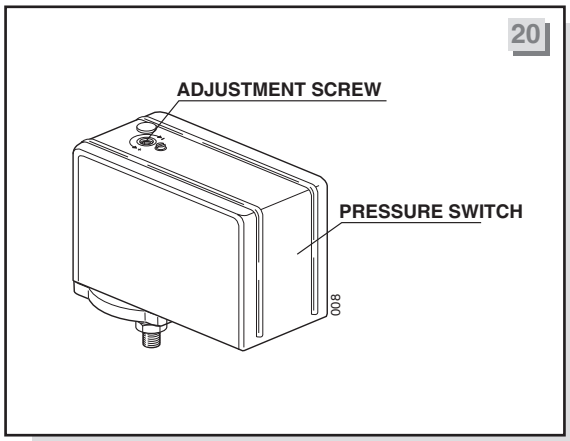

WARNING!
Cut off power while operating on the pressure switch.

Boiler pressure (at operating temperature) is normally modified exclusively in order to adapt the machine temperature to the particular type of coffee blend so as to obtain the best result in the cup.

ELECTRIC CUP WARMER (optional)

In the models equipped with the electric cup warmer, to activate it, move the main switch button (3) from position **1** (standard operation of the machine) to position **2**. To deactivate it, move it back to position **1.**

6.4 ALARM MANAGER – EK MODEL

This model communicates any anomalies through the relevant symbols on the touchpads.

1. SYMBOL CORRESPONDING TO THE COFFEE DOSE BUTTON ON DELIVERY MODE, FLASHING AFTER 5-6 SECONDS:

- Coffee ground too finely.
- Missing reading of the pulses sent by the flow meter to the dispensing group.

2. ALL DOSE SYMBOLS ON ALL TOUCHPADS FLASHING AND TEMPERATURE SYMBOLS SWITCHED OFF:

- The automatic refill system for the boiler has been operating for longer than **3 minutes** (total block of all machine operations). To restore normal operation, switch the machine off using the main switch. If the problem occurs again, check the automatic refill system for the boiler.

6.5 DIAGRAMS FOR ELECTRONIC BOARD CONNECTIONS

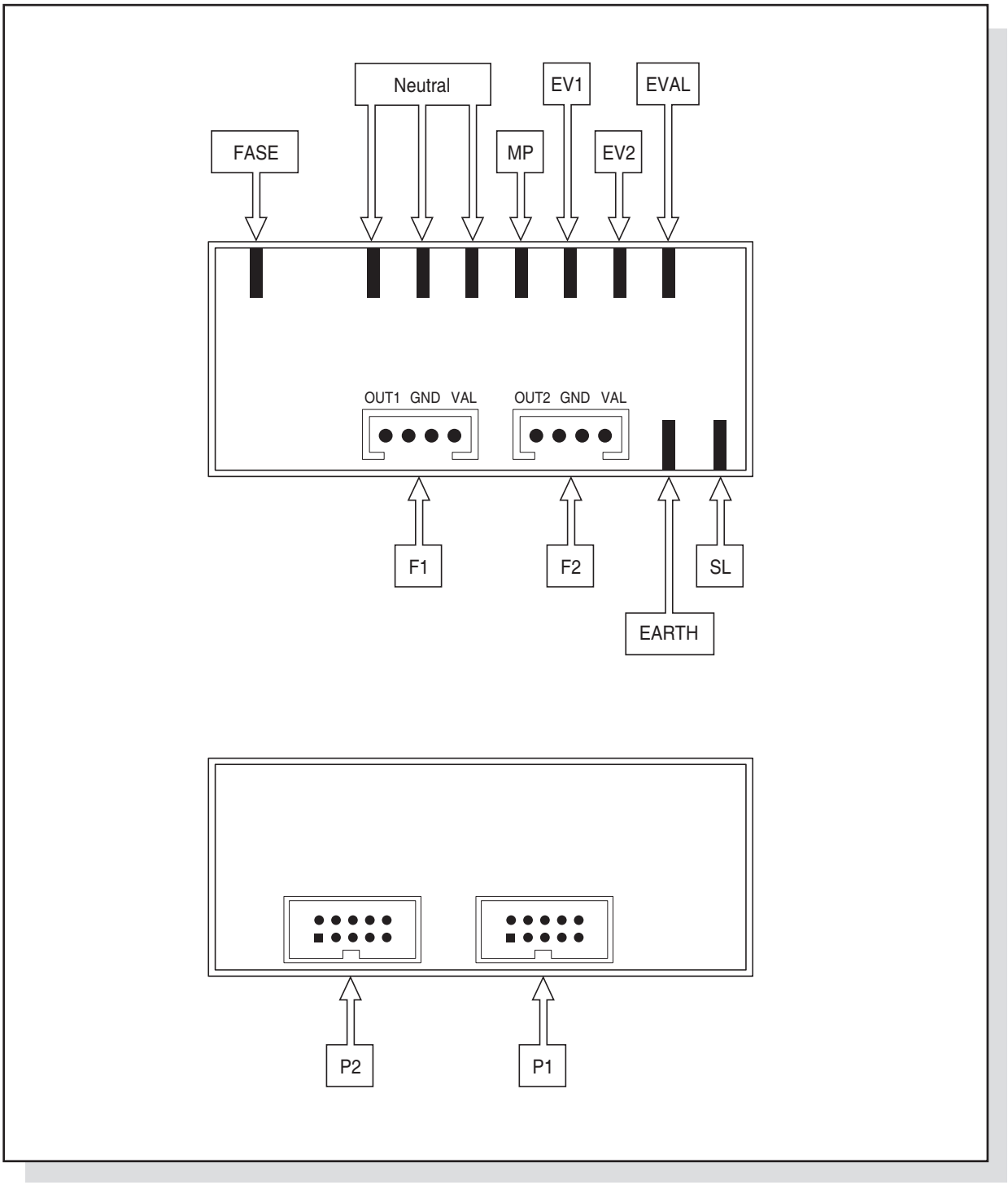

6.6 WIRING DIAGRAMS

COMPACT and S5 1 GROUP EP

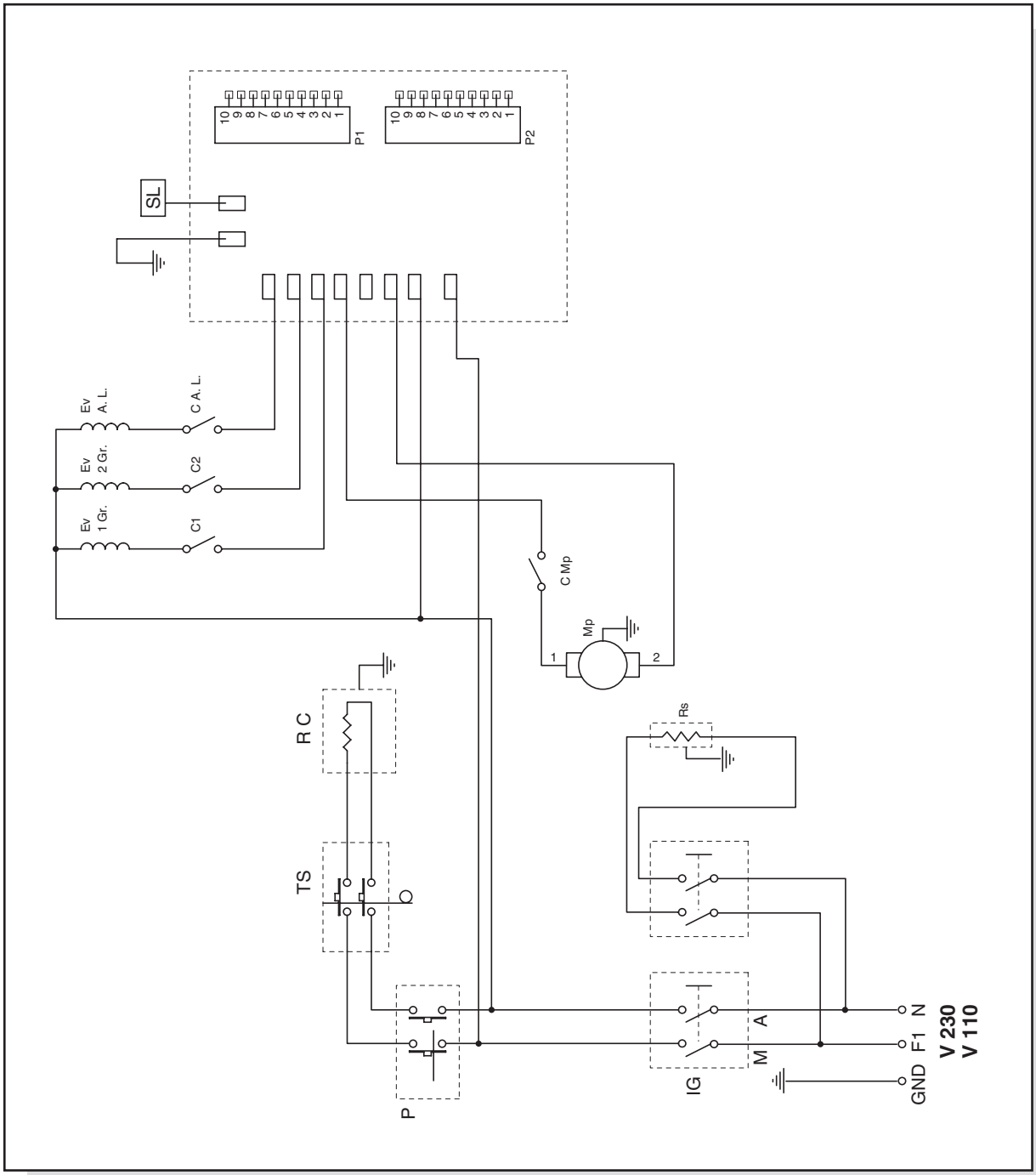

COMPACT and S5 1 GROUP EK

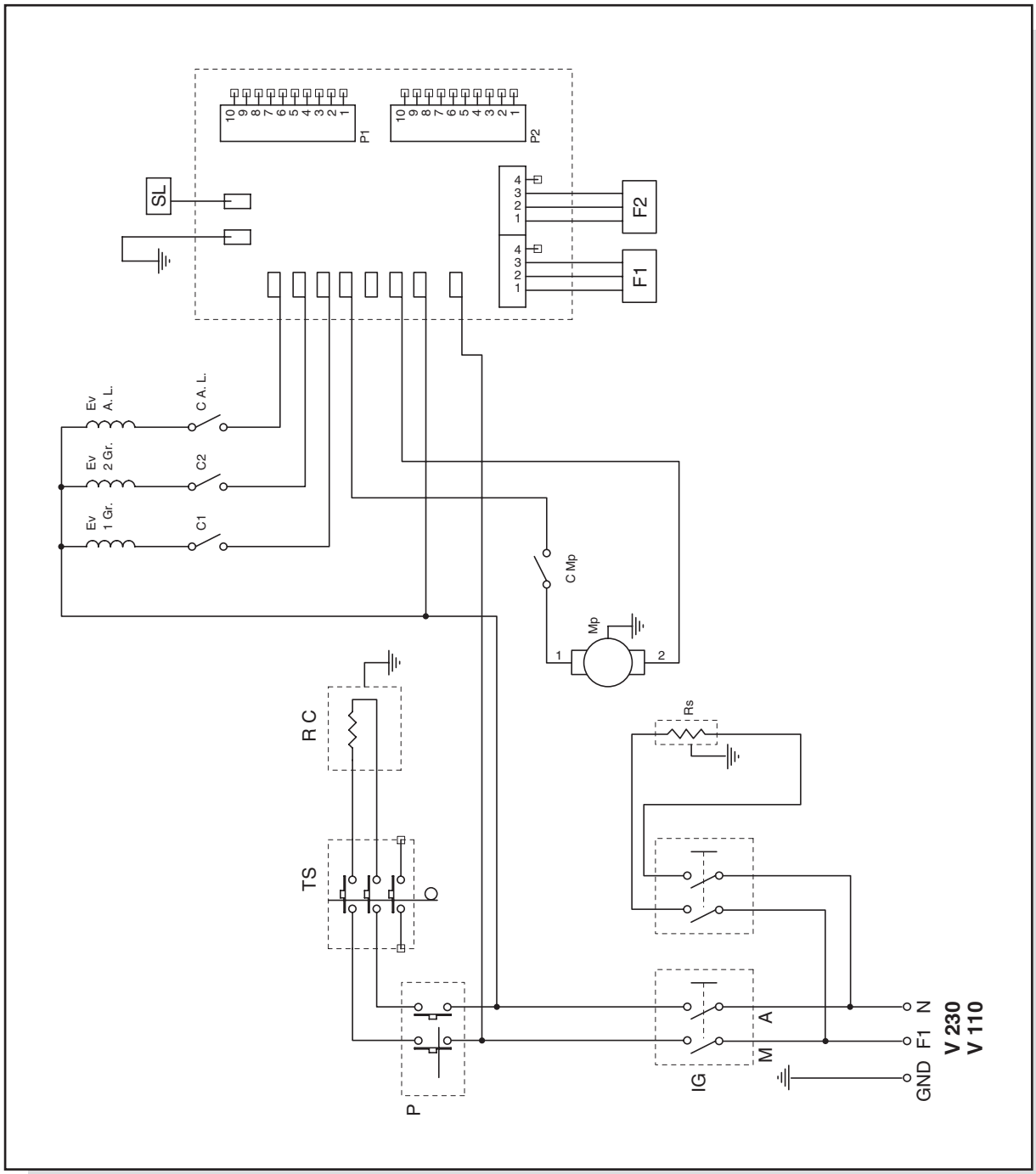

KEY TO DIAGRAMS

- **MP** Motor pump
- **RS** Cup warmer heating element
- **RC** Boiler heating element
- **EVAL** Solenoid valve, automatic water refill
- **EV1** Solenoid valve, 1st group from the right
- **EV2** Solenoid valve, 2nd group from the right
- **P1** Touchpad, 1st group from the right
- **P2** Touchpad, 2nd group from the right
- **SL** Control for water level in the boiler
- **F1** Flow meter for 1st group from the right
- **F2** Flow meter for 2nd group from the right
- **IG** Main switch
- **TS** Safety thermostat with manual reset
- **CMP** Control board relay controlling the motor pump
- **C1** Control board relay controlling the solenoid valve, 1st group from the right
- **C2** Control board relay controlling the solenoid valve, 2nd group from the right
- **CAL** Relay on the control board to control the automatic water level solenoid valve
- **P** Heating element pressure switch

6.7 PARTS

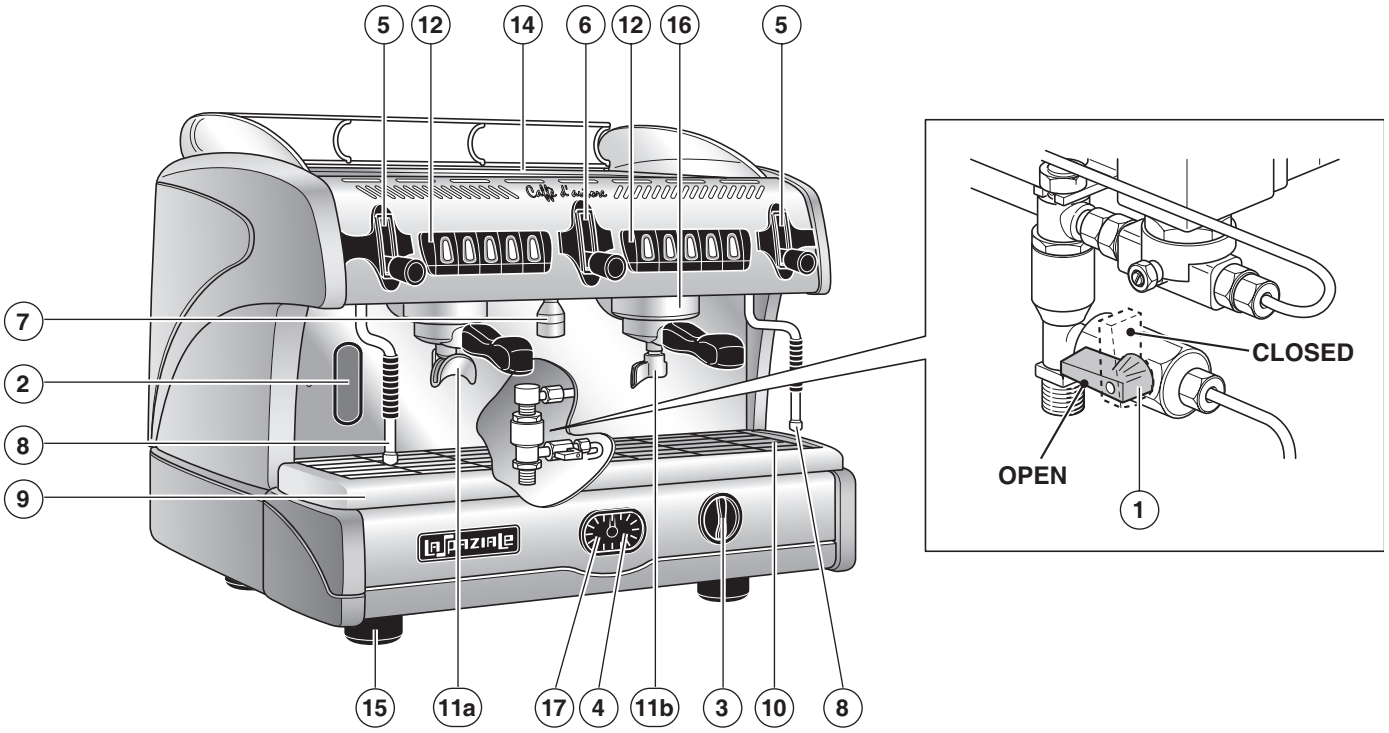

COMPACT EP

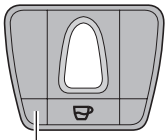

COMPACT EK

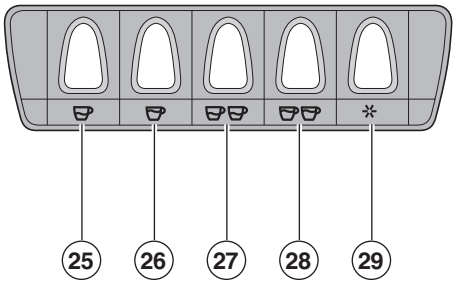

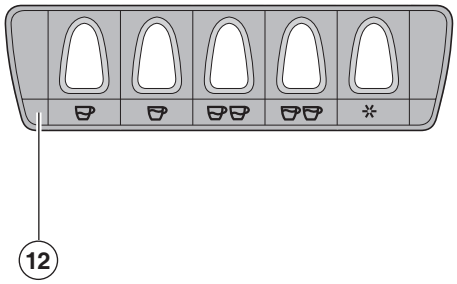

026

KEY TO PARTS

1 Tap for manual boiler filling
2 Boiler water level gauge
3 Main switch
4 Boiler pressure gauge
5 Steam delivery knob
6 Hot water delivery knob
7 Hot water spout
8 Steam wand
9 Water drip tray
10 Drip tray grid
11a 2-cup filter holder
11b 1-cup filter holder
12 Group delivery control with automatic and manual doses
12b Group delivery control - Mod EP - Super Elettrik
14 Top cup grid
15 Adjustable feet for the appliance
16 Coffee delivery group
17 Motor pump pressure gauge
25 1 short coffee button
26 1 long coffee button
27 2 short coffee button
28 2 long coffee button
29 Manual delivery button

01/2010

Graphics and Printing by "X TYPE ENGINEERING S.r.l." for "LA SPAZIALE S.p.a."

La Spaziale S.p.A.

Via E. Duse, 8
40033 Casalecchio di Reno
Bologna - (Italy)
Tel. +39 051 611.10.11
Fax +39 051 611.10.40

E-mail: info@laspaziale.com
Web Site: www.laspaziale.com